US006278365B1

(12) **United States Patent**
Kane et al.

(10) **Patent No.: US 6,278,365 B1**
(45) **Date of Patent: *Aug. 21, 2001**

(54) **SECURITY SYSTEM WITH INTERMITTENT ALARM LOCATION DETECTION**

(75) Inventors: **Roger A. Kane**, Alpharetta, GA (US); **Glen D. Dell**, Aurora, CO (US)

(73) Assignee: **Protex International Corp.**, Bohemia, NY (US)

(*) Notice: This patent issued on a continued prosecution application filed under 37 CFR 1.53(d), and is subject to the twenty year patent term provisions of 35 U.S.C. 154(a)(2).

Subject to any disclaimer, the term of this patent is extended or adjusted under 35 U.S.C. 154(b) by 0 days.

This patent is subject to a terminal disclaimer.

(21) Appl. No.: **08/885,726**

(22) Filed: **Jun. 30, 1997**

Related U.S. Application Data

(63) Continuation of application No. 08/441,925, filed on May 16, 1995, now Pat. No. 5,726,627.

(51) **Int. Cl.**[7] **G08B 1/00**

(52) **U.S. Cl.** **340/531**; 340/506; 340/571; 340/572.1; 340/568; 340/825.36; 340/825.49

(58) **Field of Search** 340/506, 571, 340/572.1, 568, 825.06, 825.36, 825.49, 505, 531, 508

(56) **References Cited**

U.S. PATENT DOCUMENTS

3,127,597	3/1964	Lewin et al.	340/538
3,253,270	5/1966	Downer	340/568.4
3,596,265	7/1971	Garland	340/568.2
4,293,852	10/1981	Rogers	340/568.1
4,573,041	2/1986	Kitagawa et al.	340/531
4,620,182	10/1986	Keifer	340/568.2
4,746,909	5/1988	Israel et al.	340/568.1
4,755,792	7/1988	Pezzolo et al.	340/538

(List continued on next page.)

FOREIGN PATENT DOCUMENTS

1730092	3/1992	(AU) .
33 02 459	11/1983	(DE) .
33 43 436	2/1991	(DE) .
195 12 567	7/1996	(DE) .
196 12 374	8/1997	(DE) .

(List continued on next page.)

OTHER PUBLICATIONS

"Turtle Alarm", Se–Kure Controls, Inc., Chicago, IL (1993).
Se–Kure Controls, Inc. Catalog No. 194, Chicago, IL (Jan. 1994), pp. 7, 6, 4 and 2.
Se–Kure Controls, Inc. Catalog No. 894, Chicago, IL (Aug. 1994), p. 7.

(List continued on next page.)

Primary Examiner—Daryl Pope
(74) *Attorney, Agent, or Firm*—Collard & Roe, P.C.

(57) **ABSTRACT**

This invention provides a security system which remembers an alarm event until either the alarm event is intentionally reset or the condition causing the alarm event is corrected. The security system includes at least one sensor coupled to a hub and at least one hub. A serial chain of hubs is connected to a control unit having a controller. The controller sounding a main alarm when an alarm event is generated by the at least one sensor. After the main alarm is silenced and the security system is disarmed, the controller activates a hub annunciator of a hub connected to one of the sensors having generated an alarm event. When a predetermined period of time from disarming the security system expires, the controller sounds the main alarm if there are any alarm events that occurred during the predetermined period of time that are either not reset or the condition causing the alarm event is not corrected.

48 Claims, 19 Drawing Sheets

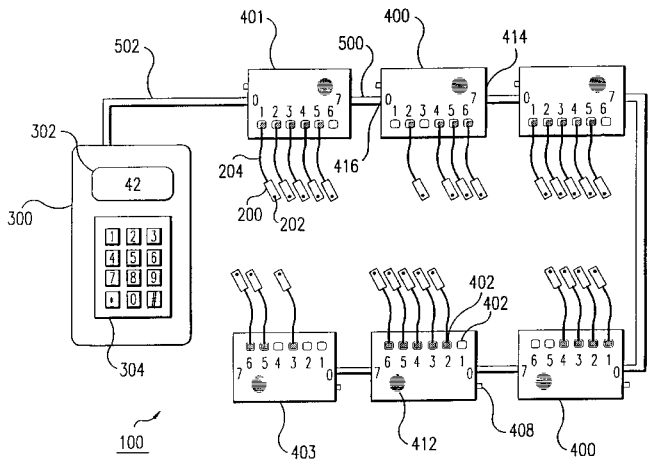

U.S. PATENT DOCUMENTS

5,003,292	3/1991	Harding et al.	340/568.4
5,066,942	11/1991	Matsuo	340/568.2
5,089,807	2/1992	Shim	340/568.2
5,153,567	10/1992	Chimento	340/691.5
5,172,098	12/1992	Leyden et al.	340/538
5,317,304	5/1994	Choi	340/571
5,341,124	8/1994	Leyden et al.	340/568.4
5,345,219	9/1994	Rogers	340/568.2
5,345,220	9/1994	Wachsman	340/568.4
5,379,023	1/1995	Dalton	340/568.8
5,543,782	8/1996	Rothbaum et al.	340/568.2
5,552,771	9/1996	Leyden et al.	340/571
5,561,417	10/1996	Rothbaum et al.	340/568.2
5,604,484	2/1997	Rogers	340/568
5,652,569	7/1997	Gerstenberger et al.	340/573.4
5,721,530 *	2/1998	Right et al.	340/531
5,821,857	10/1998	Rand	340/568.8

FOREIGN PATENT DOCUMENTS

0 116 701	12/1983	(EP) .
0 537 941	10/1992	(EP) .
WO96/31852	10/1996	(WO) .
WO97/31374	8/1997	(WO) .

OTHER PUBLICATIONS

"The Protex ProStrip," Protex International Corp., Bohemia, NY 11716, Jul. 8, 1994.

"Volumatic Star Trak" Brochure.

* cited by examiner

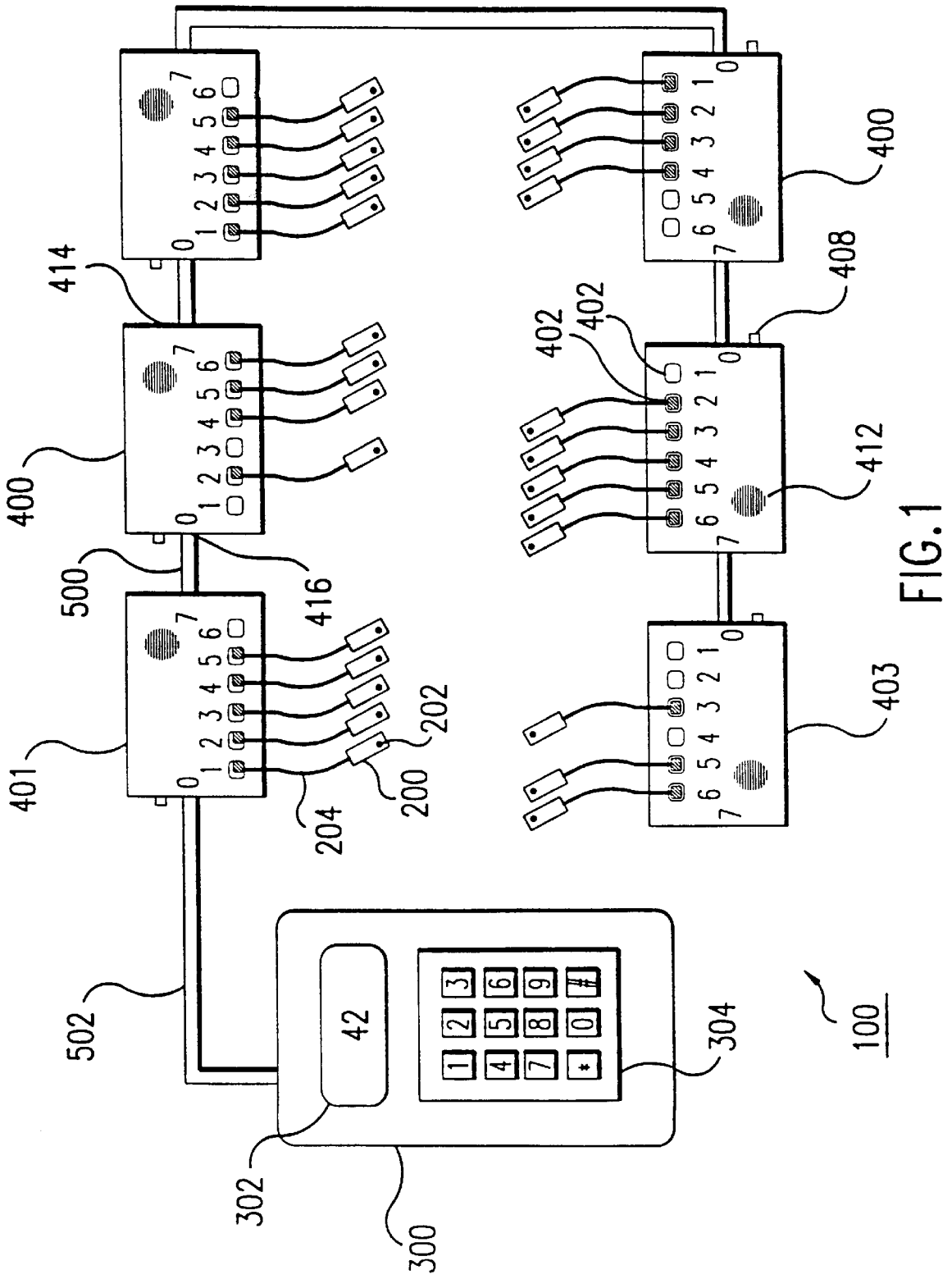
400
401
402
403
408
412
414
416
200
202
204
300
302
304
42
500
502
100

FIG. 1

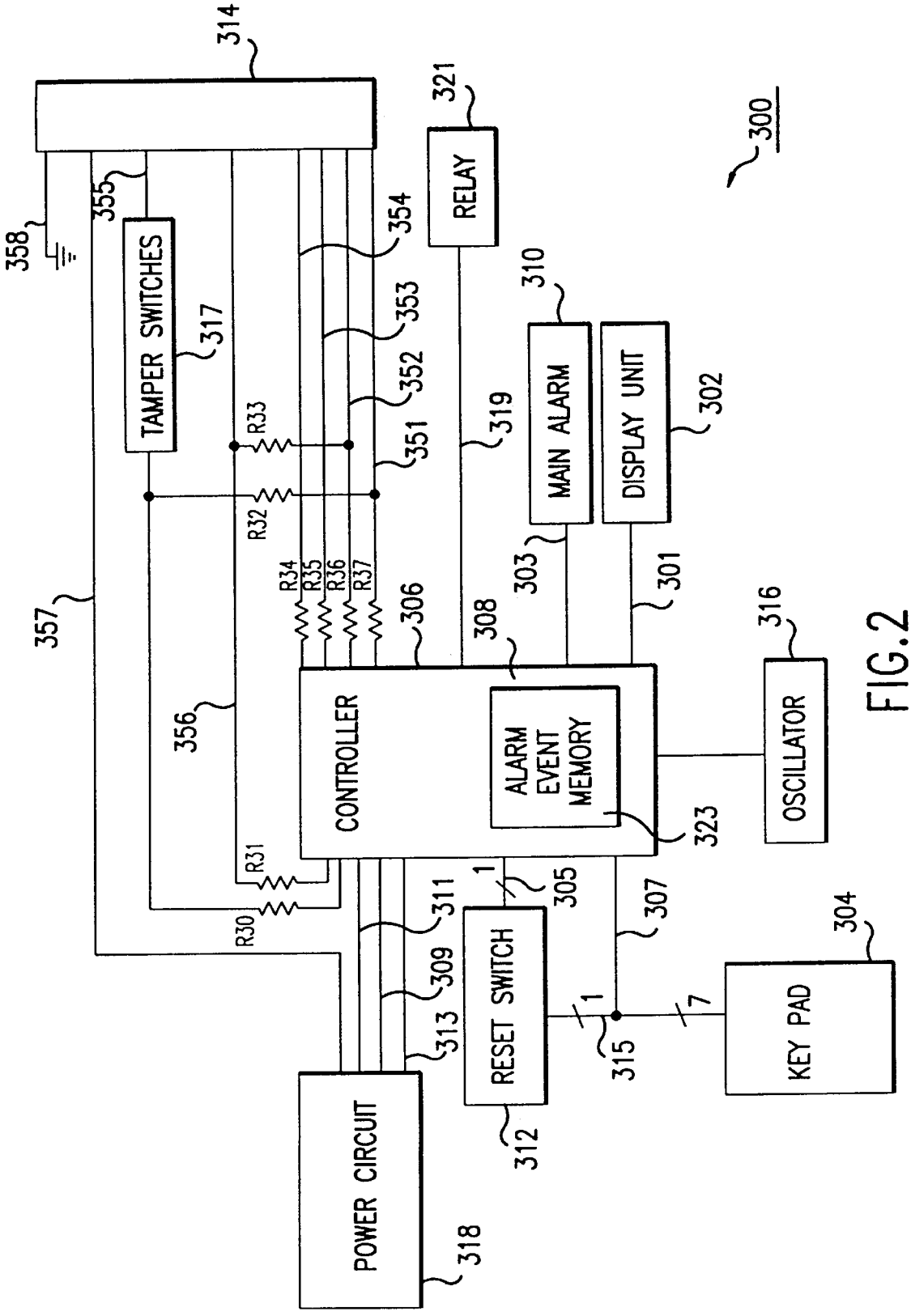
314
321
RELAY
300
355
354
358
TAMPER SWITCHES
317
353
310
MAIN ALARM
DISPLAY UNIT
302
352
R33
351
319
R32
R34
R35
R36
R37
303
301
357
306
308
316
356
CONTROLLER
ALARM EVENT MEMORY
OSCILLATOR
323
R31
311
1
305
307
304
R30
309
RESET SWITCH
KEY PAD
313
1
7
315
312
POWER CIRCUIT
318

FIG.2

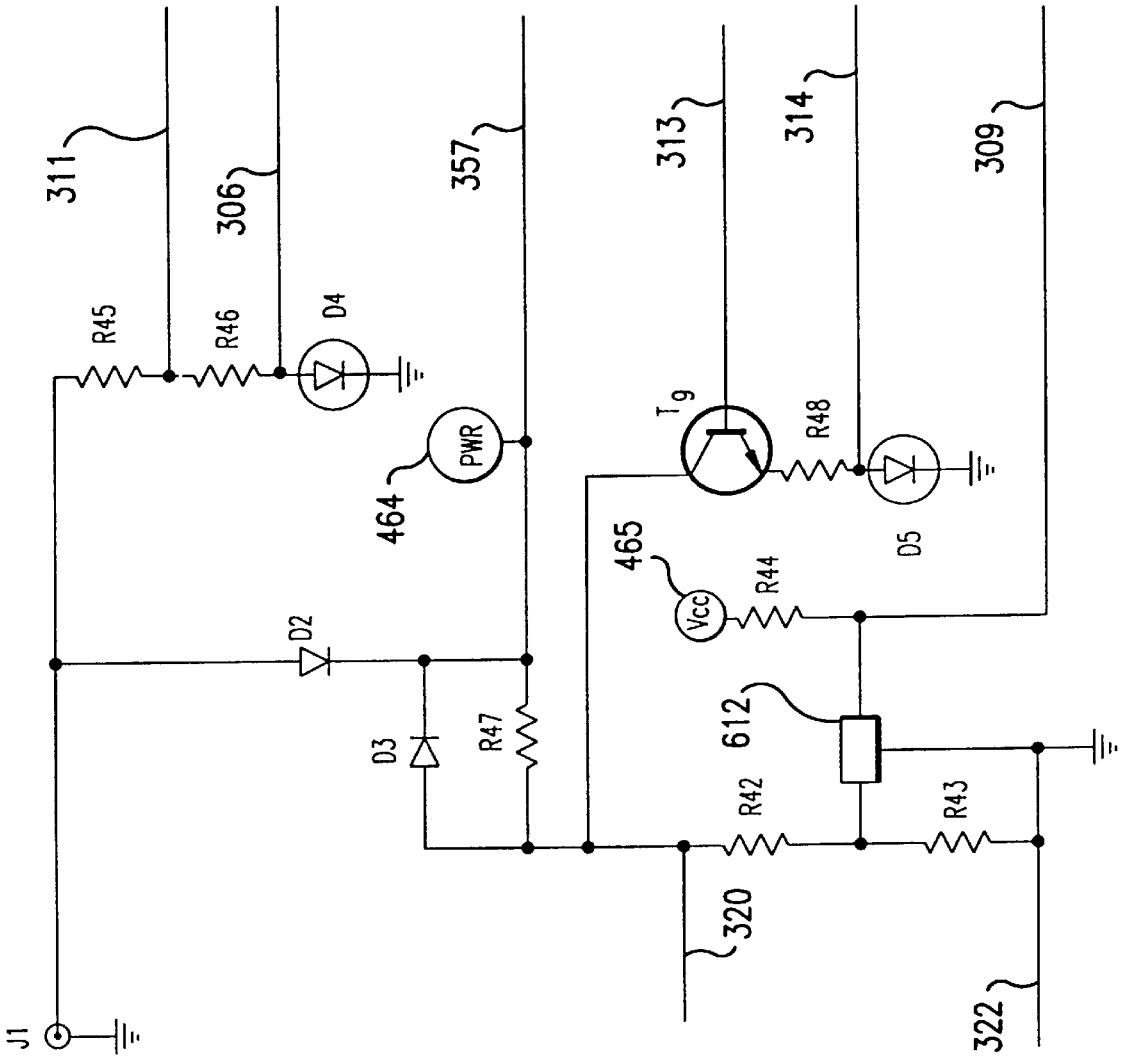
311
306
357
313
314
309
R45
R46
D4
PWR
464
T_g
R48
D5
465
Vcc
R44
D2
D3
R47
612
R42
R43
320
322
J1
318

FIG.3

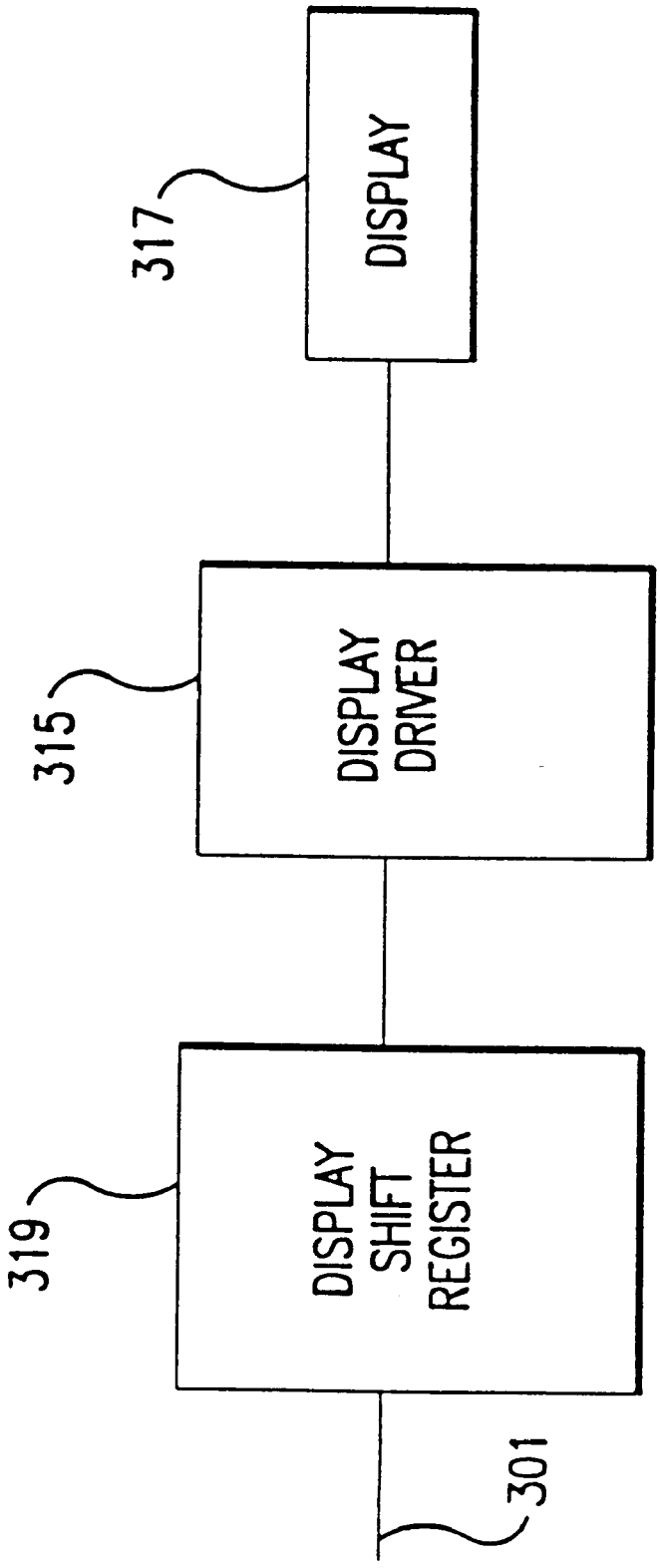
317
DISPLAY
315
DISPLAY DRIVER
319
DISPLAY SHIFT REGISTER
301

FIG. 4

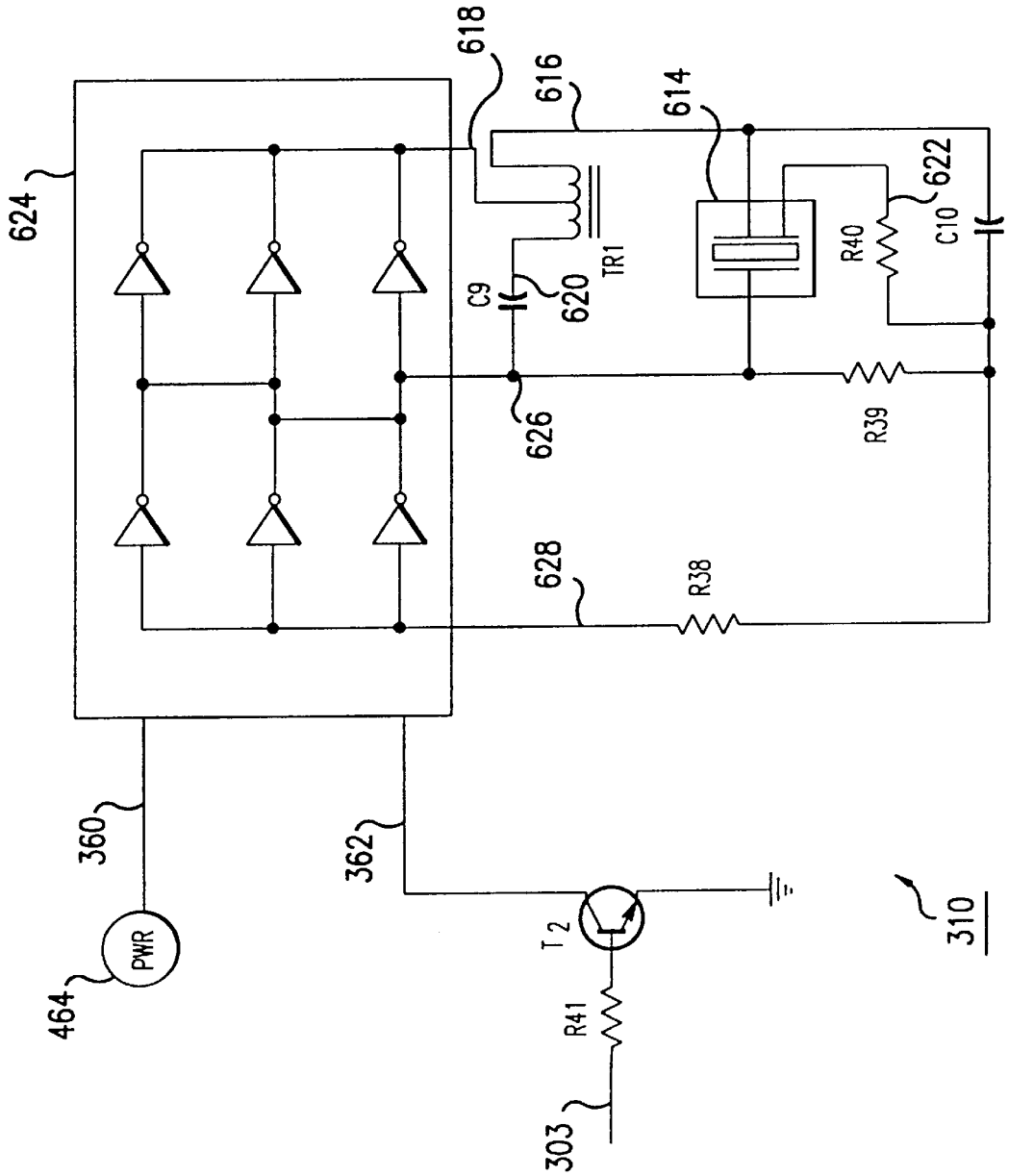
618
616
614
624
622
C10
R40
TR1
C9
620
626
R39
628
R38
360
362
PWR
464
T2
R41
303
310

FIG.5

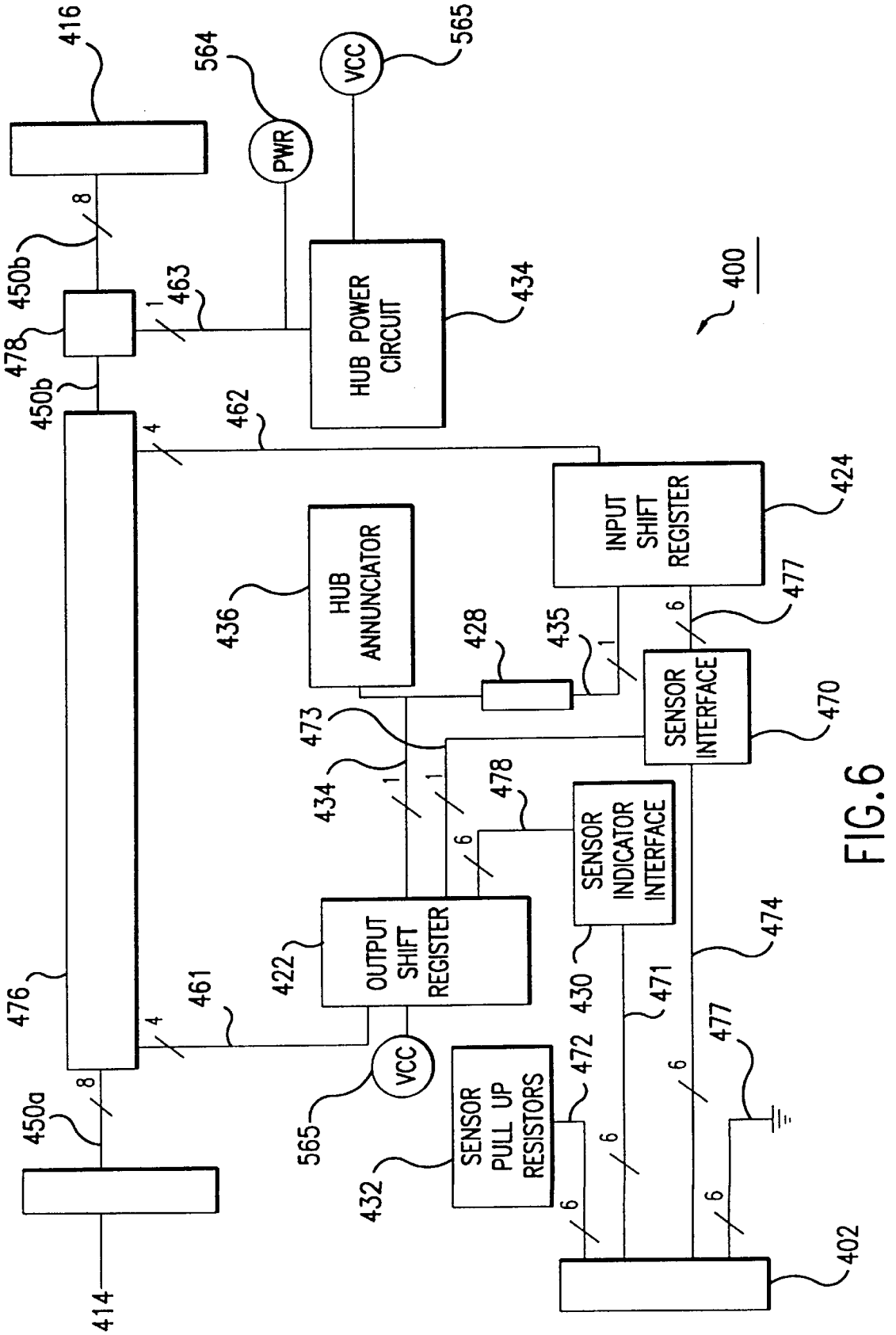
416
564
PWR
VCC
565
450b
8
463
1
HUB POWER CIRCUIT
434
400
478
450b
462
4
424
INPUT SHIFT REGISTER
HUB ANNUNCIATOR
436
428
435
1
6
477
SENSOR INTERFACE
470
473
434
1
1
478
SENSOR INDICATOR INTERFACE
6
474
OUTPUT SHIFT REGISTER
422
430
471
476
461
4
VCC
565
SENSOR PULL UP RESISTORS
472
477
450a
8
6
432
6
6
402
414

FIG.6

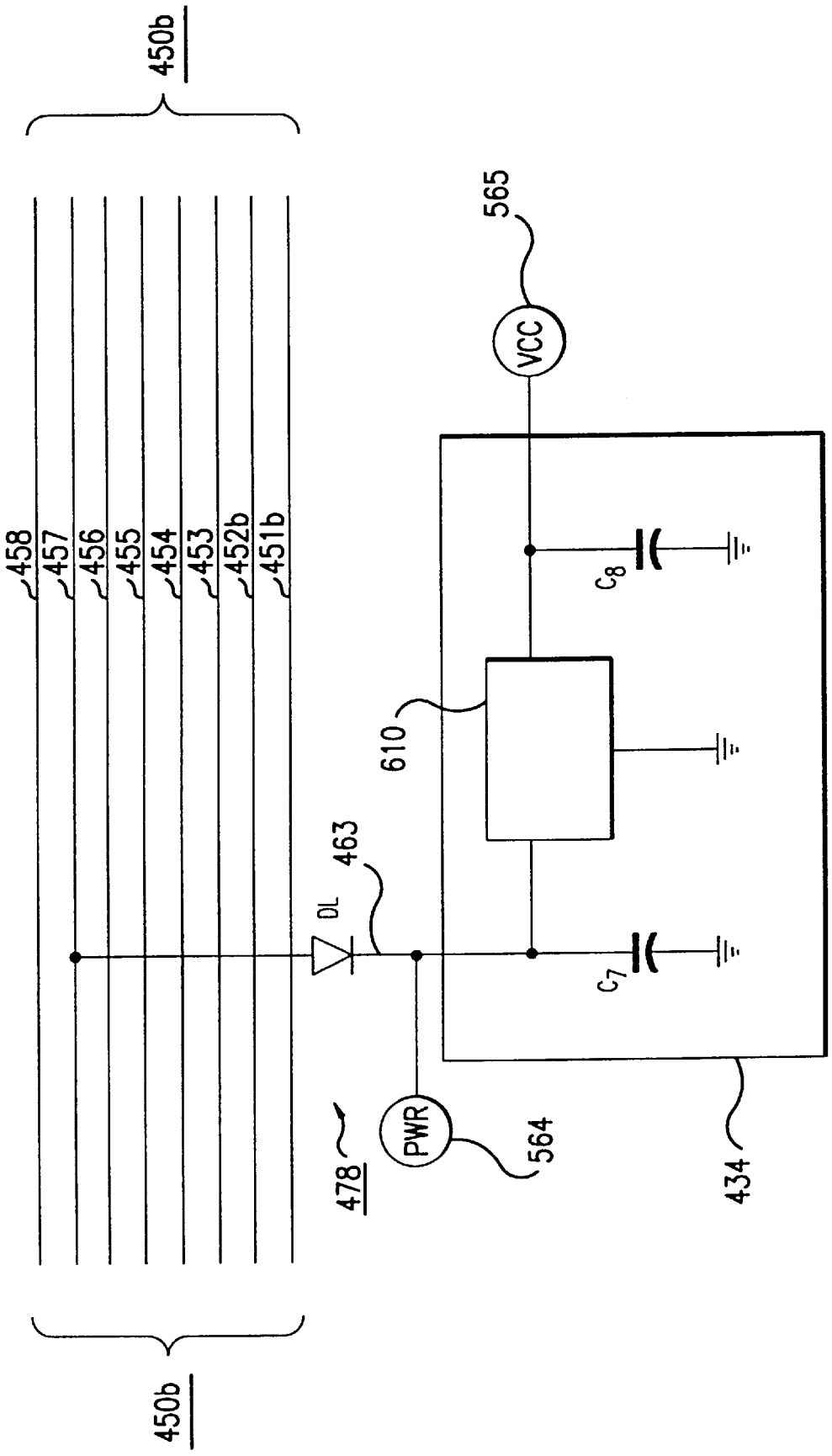
450b
565
VCC
458
457
456
455
454
453
452b
451b
610
463
DL
C8
C7
478
PWR
564
434
450b

FIG.7

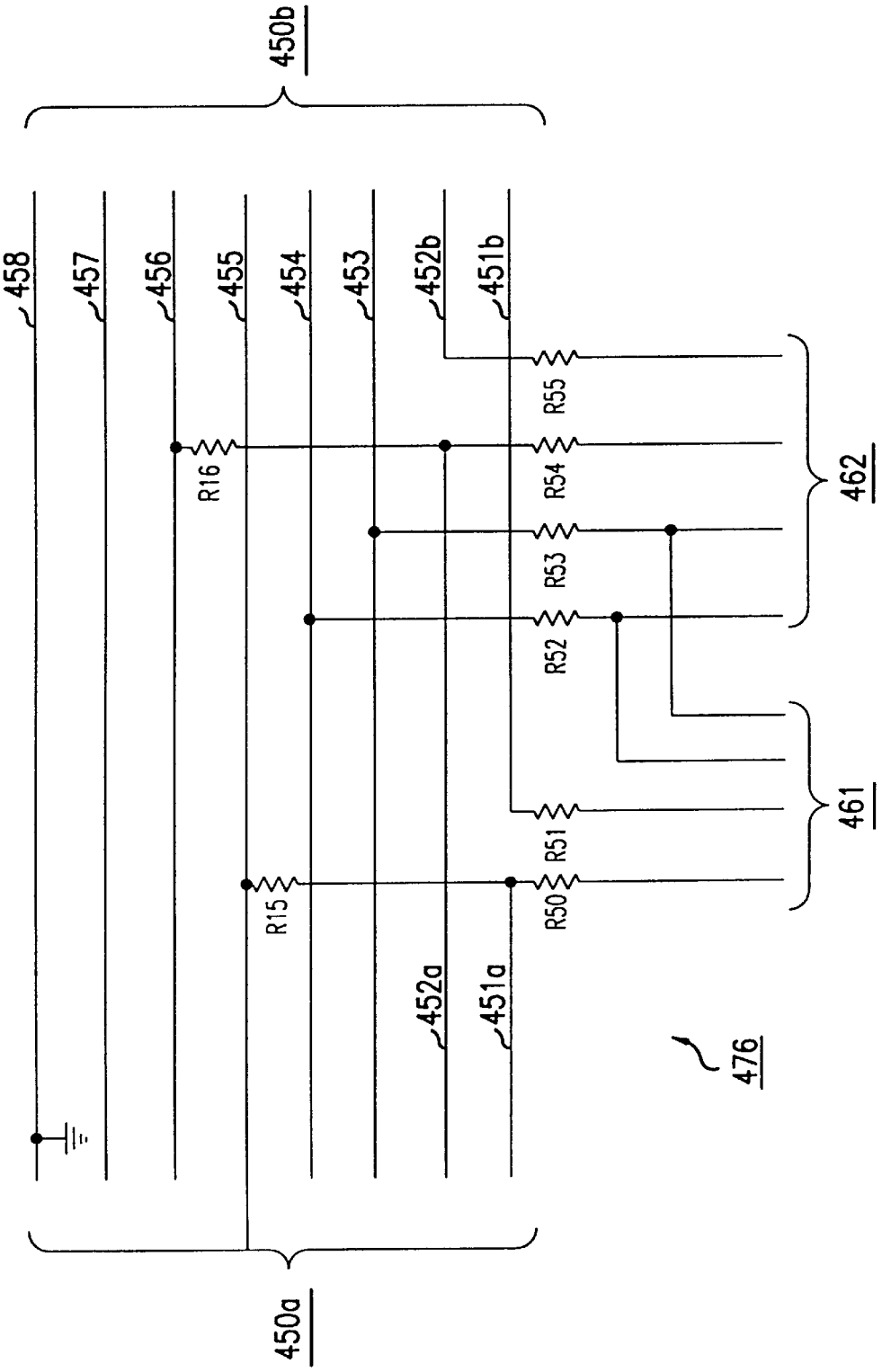
450b
458
457
456
455
454
453
452b
451b
R55
R16
R54
R53
R52
462
461
R51
R15
R50
452a
451a
476
450a

FIG.8

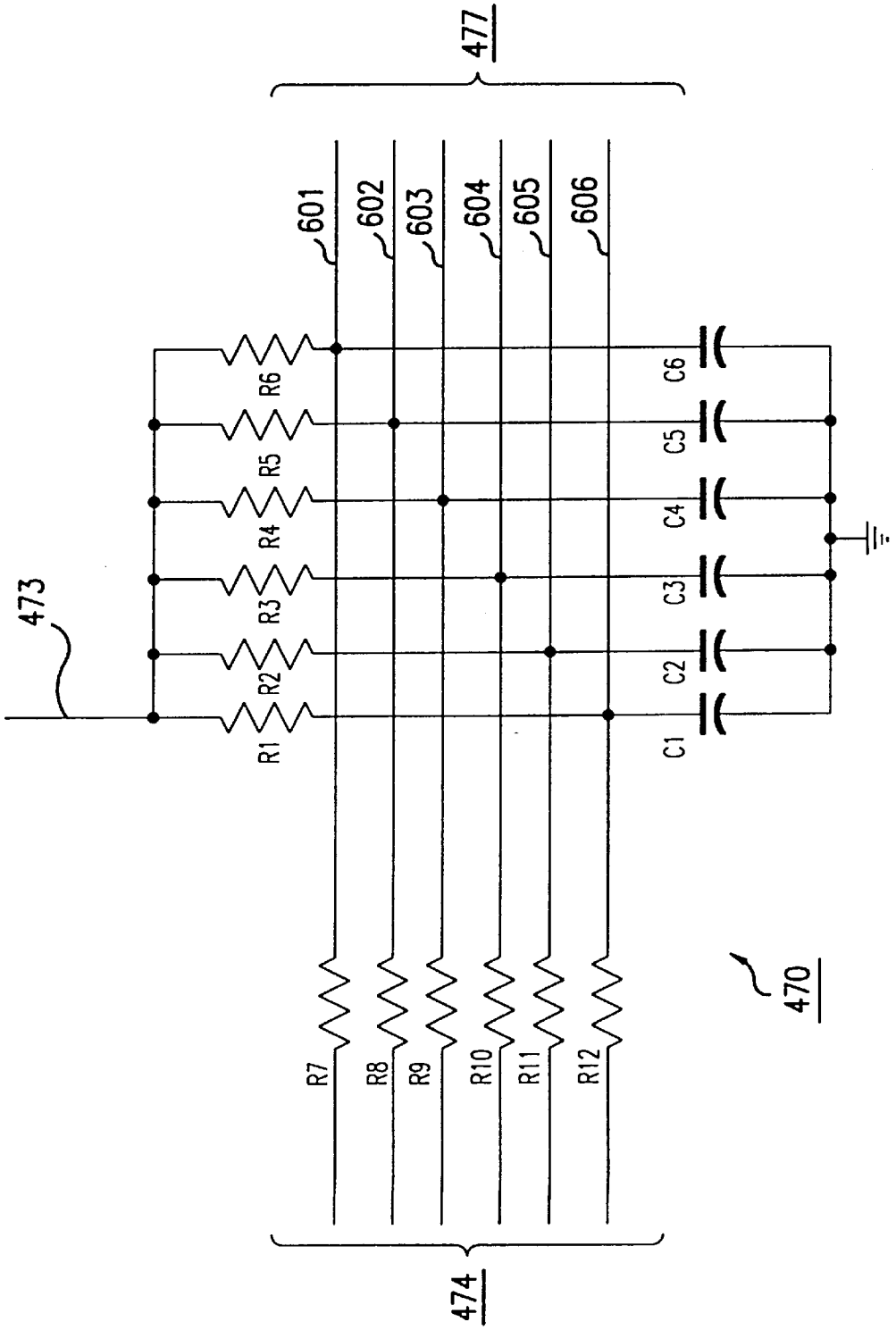
477
601
602
603
604
605
606
R6
R5
R4
R3
R2
R1
C6
C5
C4
C3
C2
C1
473
R7
R8
R9
R10
R11
R12
470
474

FIG.9

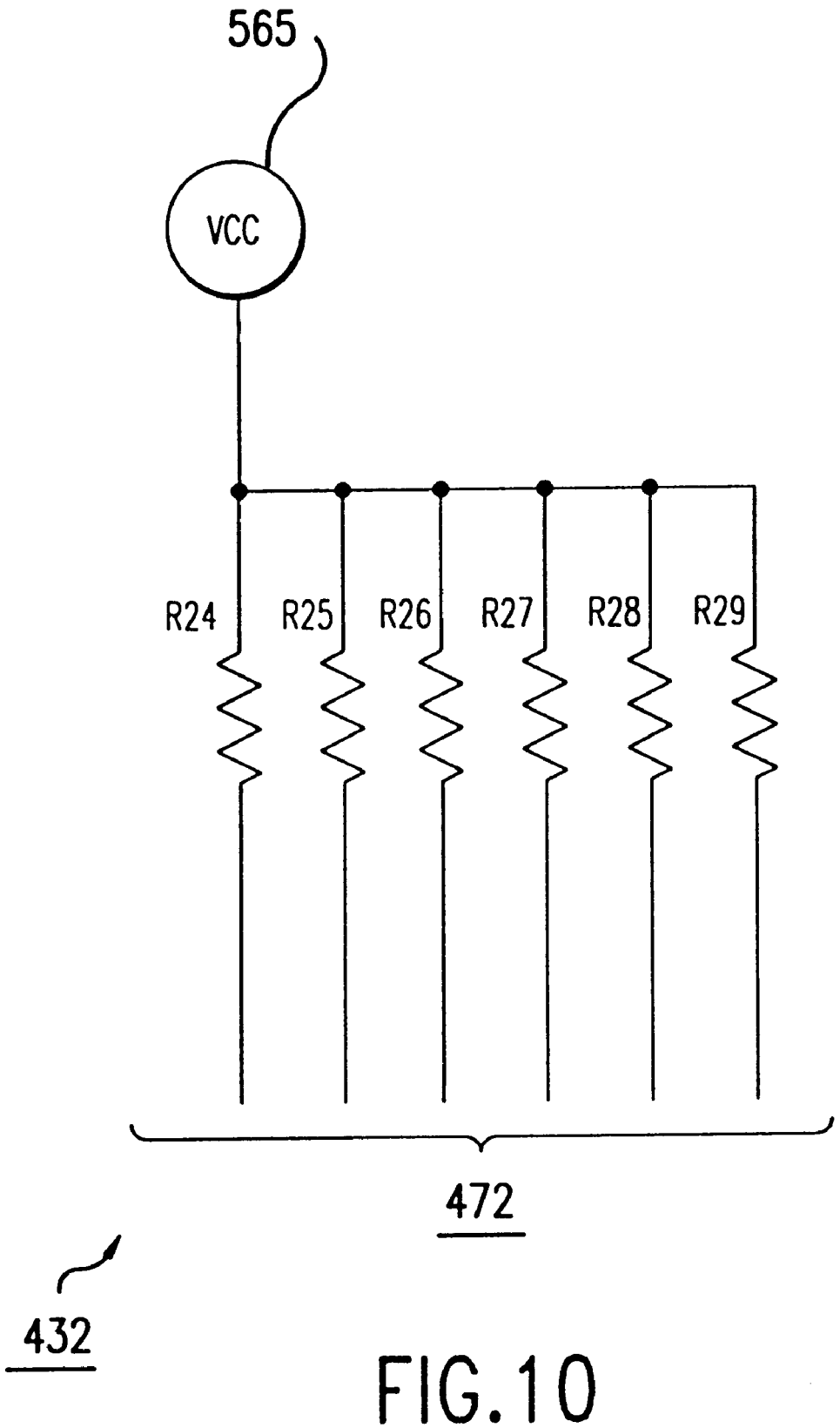

FIG.10

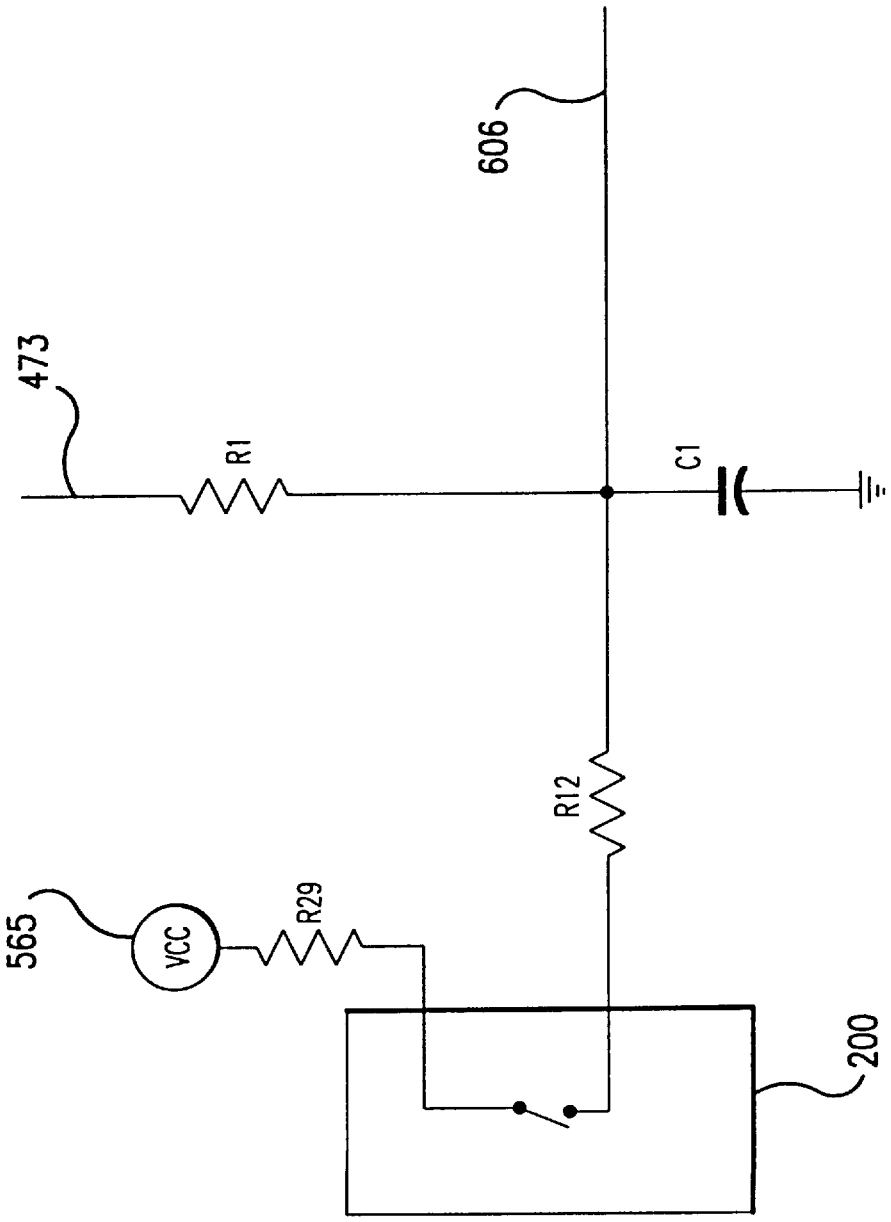

FIG. 11

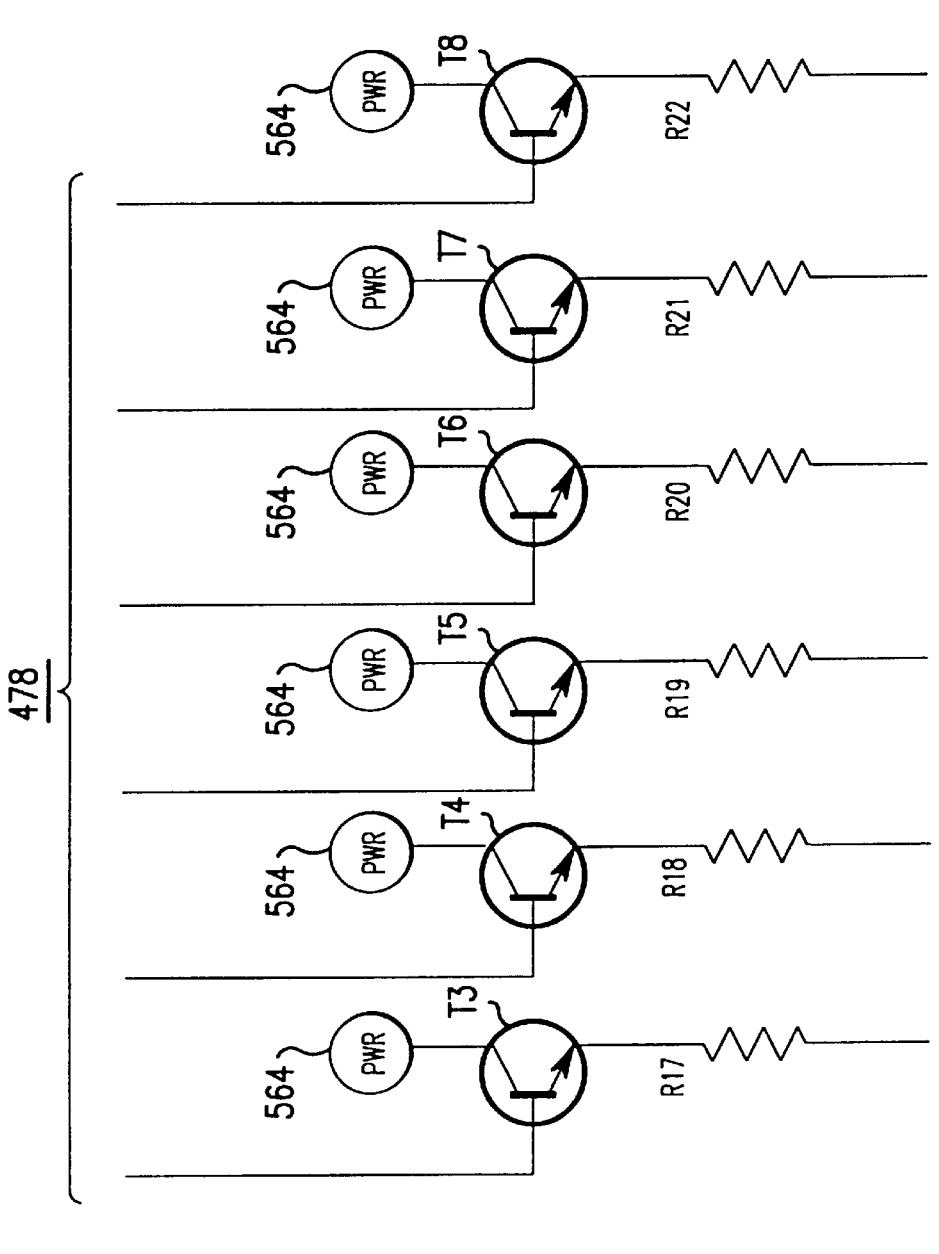

FIG. 12

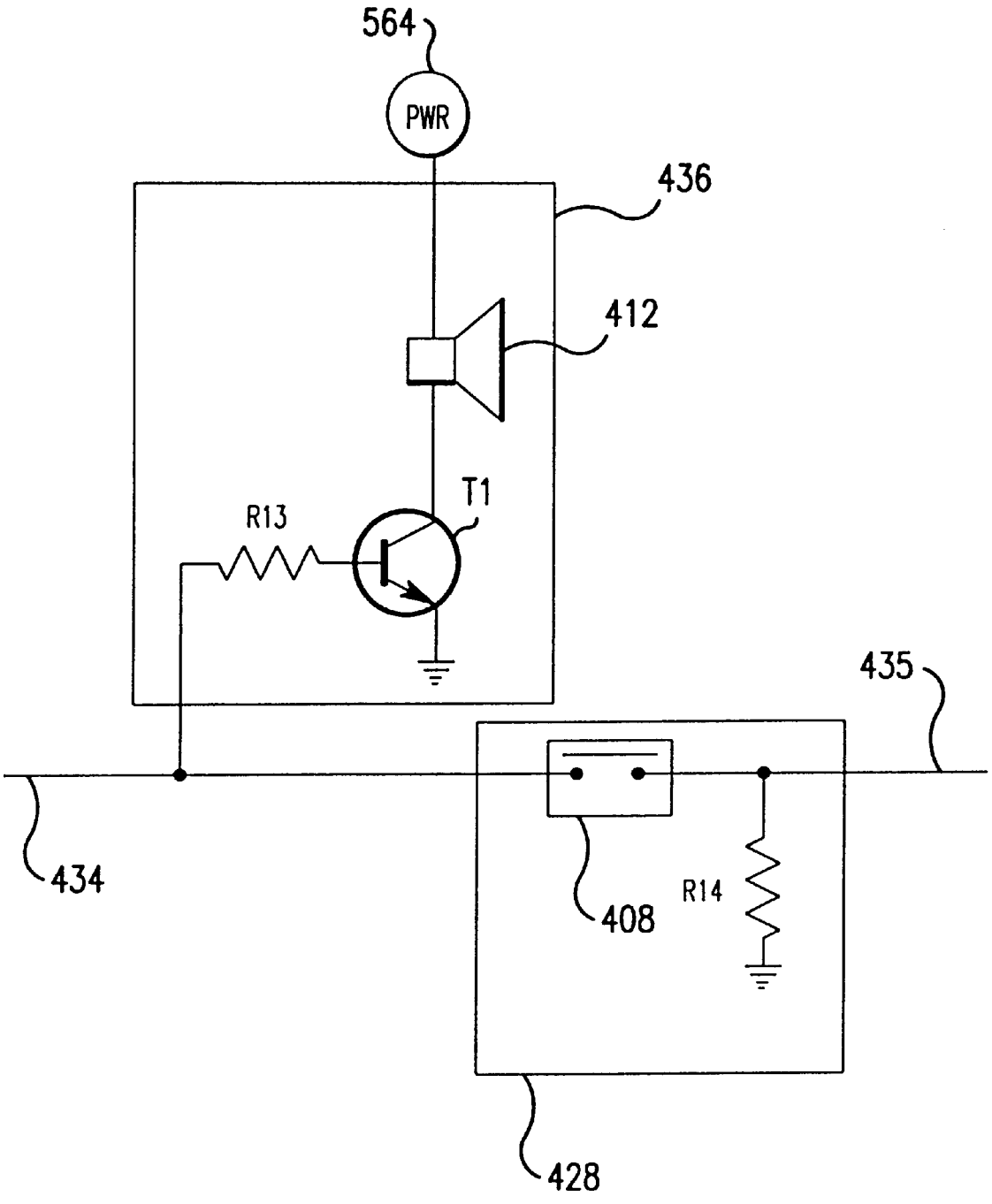

FIG.13

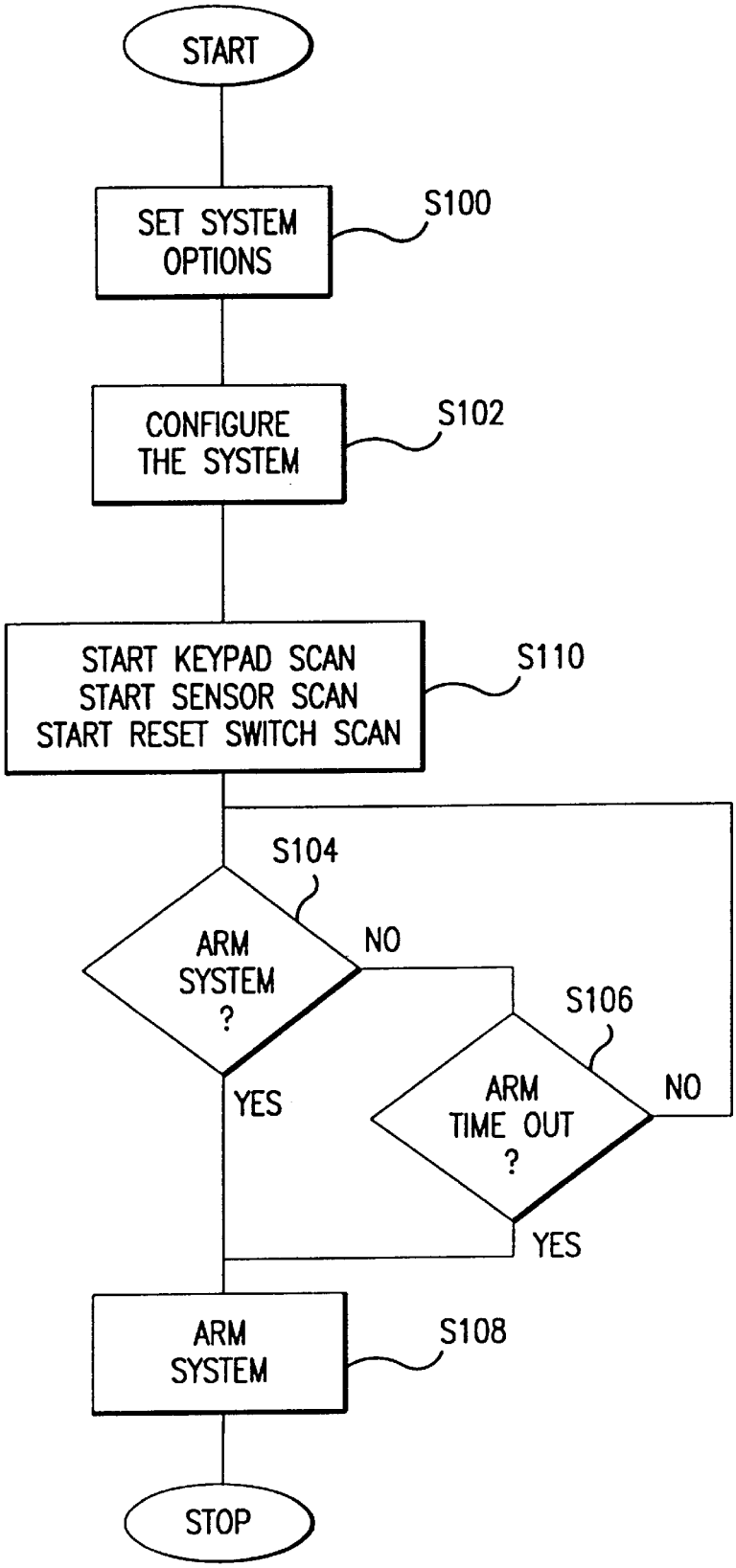
START
SET SYSTEM OPTIONS
S100
CONFIGURE THE SYSTEM
S102
START KEYPAD SCAN
START SENSOR SCAN
START RESET SWITCH SCAN
S110
S104
ARM SYSTEM ?
NO
YES
S106
ARM TIME OUT ?
NO
YES
ARM SYSTEM
S108
STOP

FIG.14

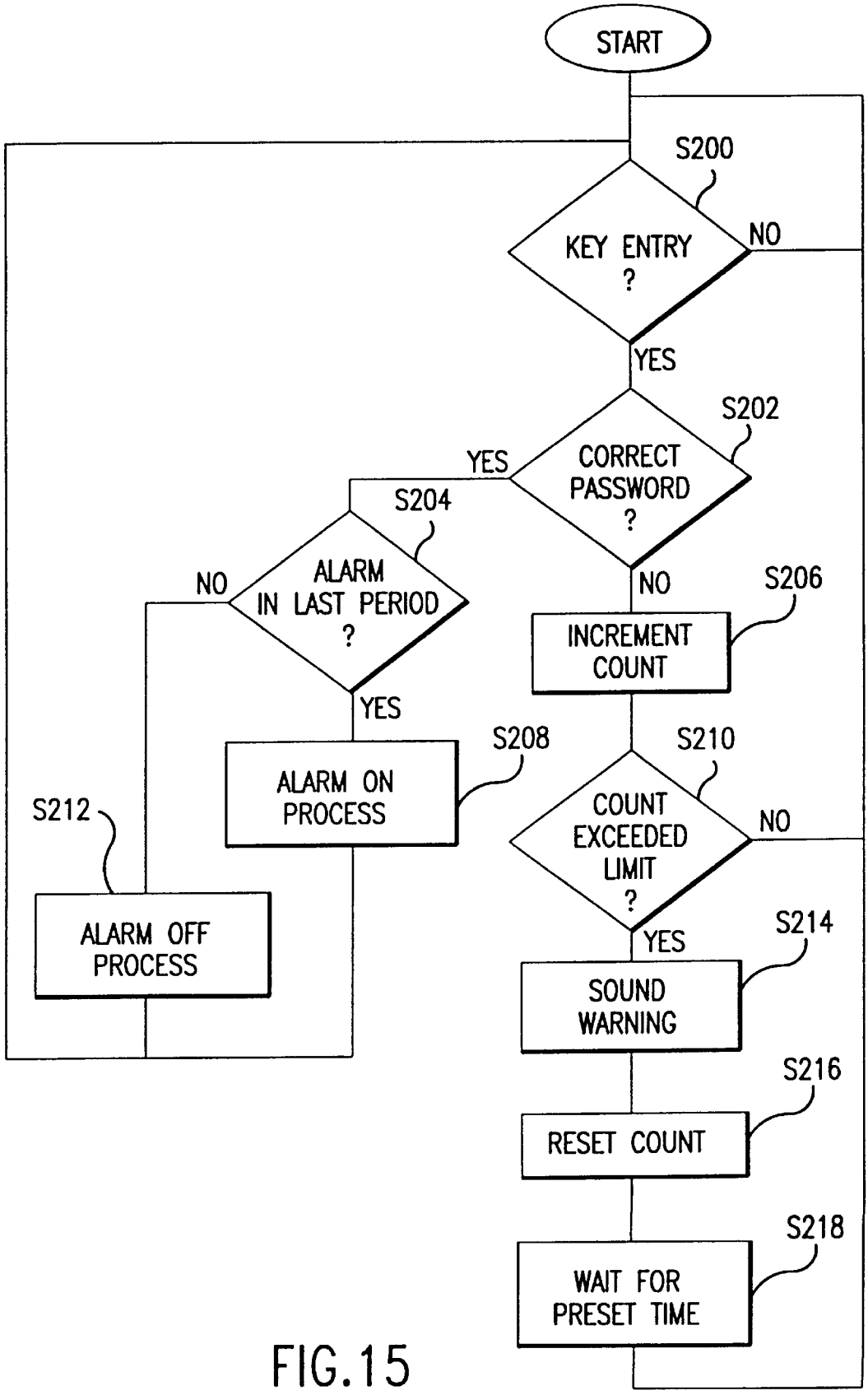
START
S200
KEY ENTRY ?
NO
YES
S202
CORRECT PASSWORD ?
YES
S204
ALARM IN LAST PERIOD ?
NO
NO
S206
INCREMENT COUNT
YES
S208
ALARM ON PROCESS
S210
COUNT EXCEEDED LIMIT ?
NO
S212
ALARM OFF PROCESS
YES
S214
SOUND WARNING
S216
RESET COUNT
S218
WAIT FOR PRESET TIME

FIG.15

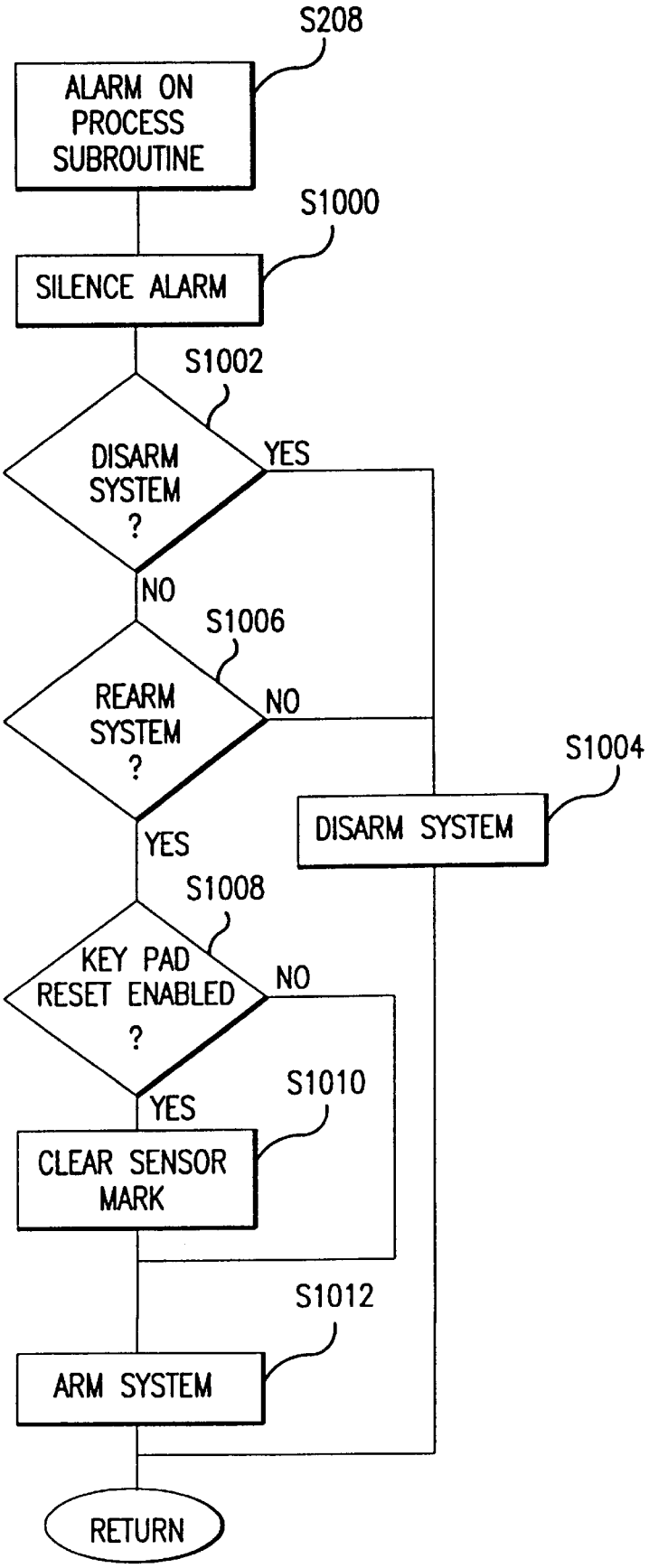
S208
ALARM ON PROCESS SUBROUTINE
S1000
SILENCE ALARM
S1002
DISARM SYSTEM ?
YES
NO
S1006
REARM SYSTEM ?
NO
S1004
DISARM SYSTEM
YES
S1008
KEY PAD RESET ENABLED ?
NO
S1010
YES
CLEAR SENSOR MARK
S1012
ARM SYSTEM
RETURN

FIG.16

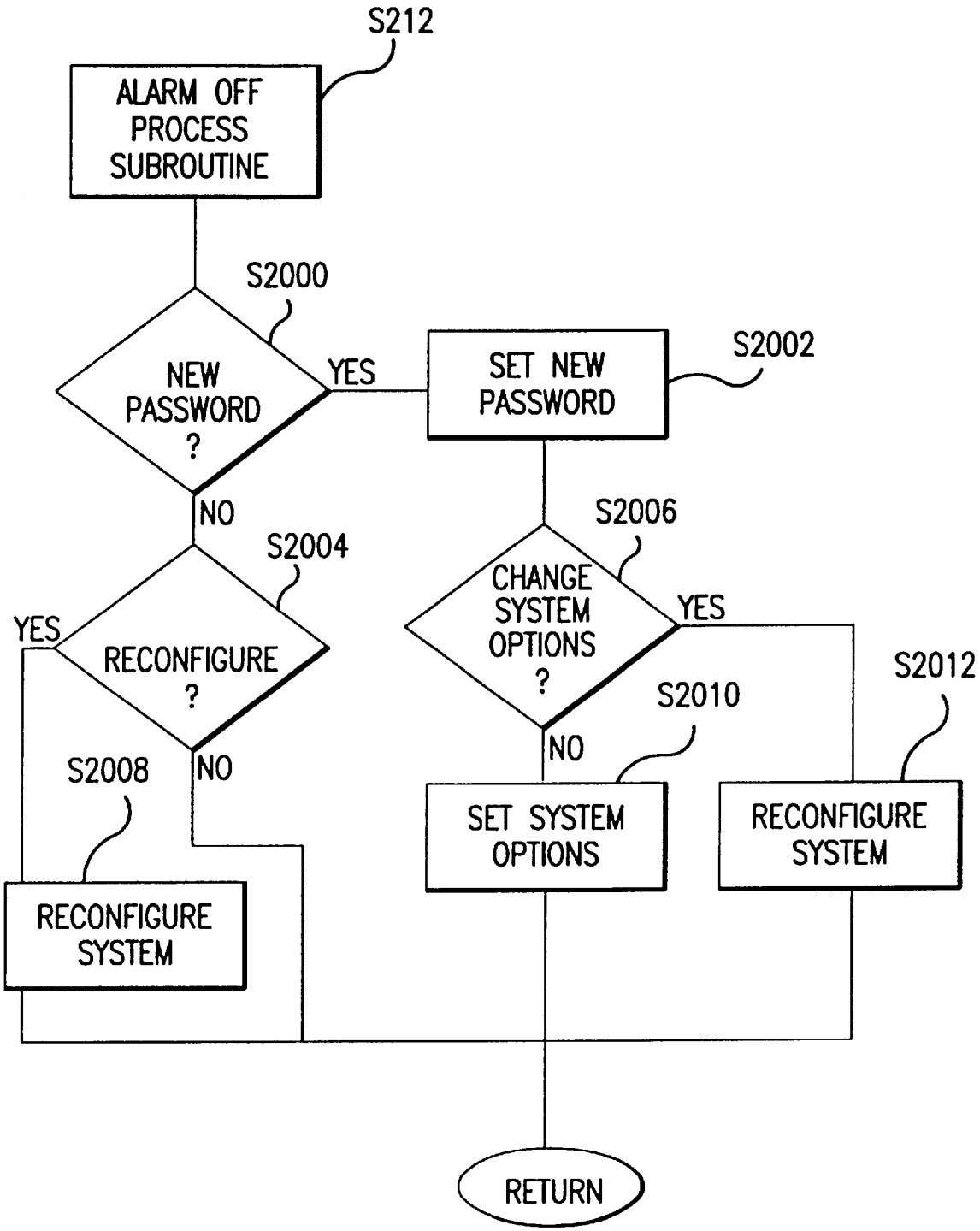
S212
ALARM OFF PROCESS SUBROUTINE
S2000
NEW PASSWORD ?
YES
S2002
SET NEW PASSWORD
NO
S2004
S2006
CHANGE SYSTEM OPTIONS ?
YES
YES
RECONFIGURE ?
S2012
S2010
NO
NO
S2008
SET SYSTEM OPTIONS
RECONFIGURE SYSTEM
RECONFIGURE SYSTEM
RETURN

FIG.17

FIG. 18

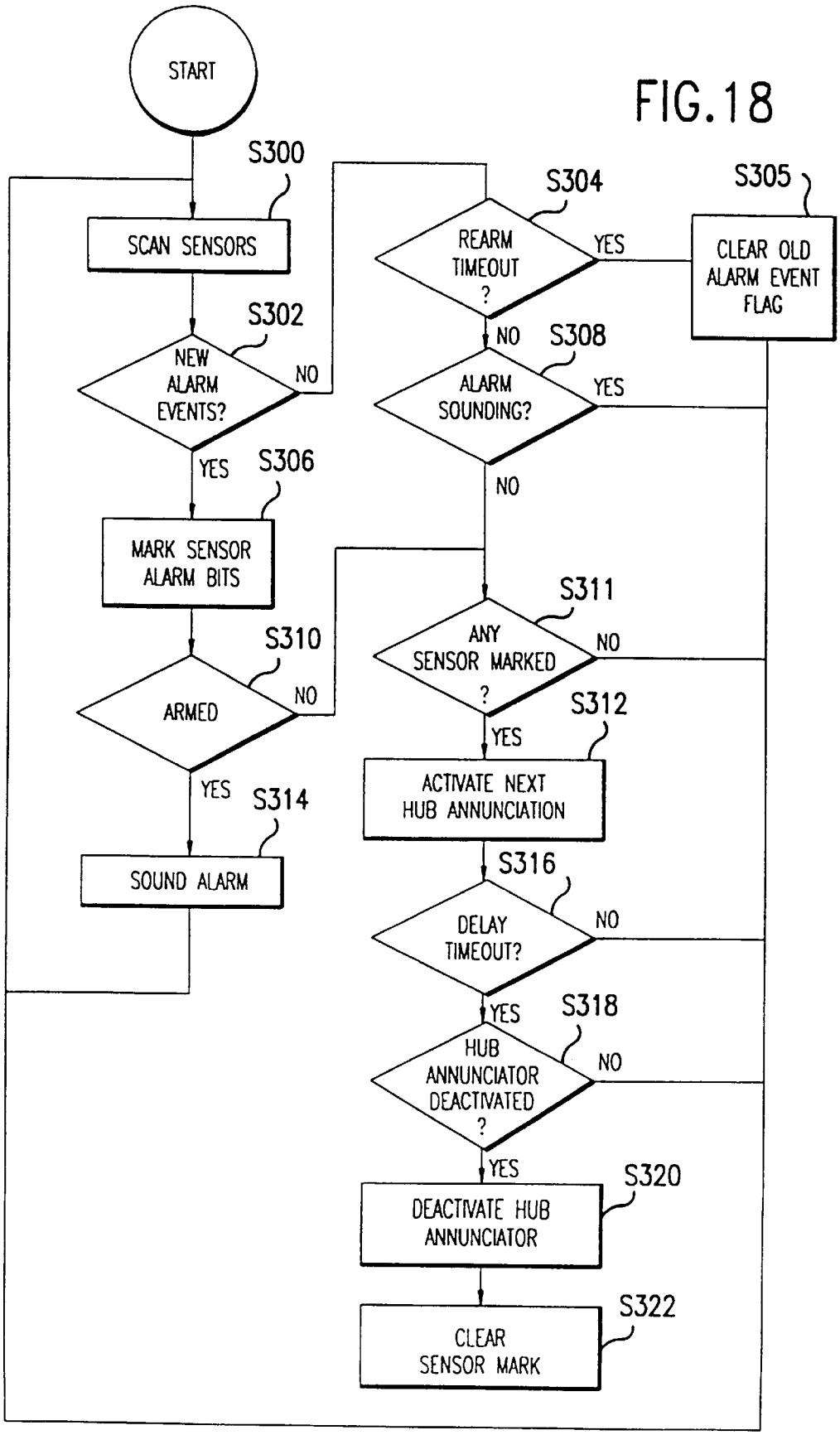
START
S300
SCAN SENSORS
S302
NEW ALARM EVENTS?
NO
YES
S306
MARK SENSOR ALARM BITS
S310
ARMED
NO
YES
S314
SOUND ALARM
S304
REARM TIMEOUT ?
YES
NO
S305
CLEAR OLD ALARM EVENT FLAG
S308
ALARM SOUNDING?
YES
NO
S311
ANY SENSOR MARKED ?
NO
YES
S312
ACTIVATE NEXT HUB ANNUNCIATION
S316
DELAY TIMEOUT?
NO
YES
S318
HUB ANNUNCIATOR DEACTIVATED ?
NO
YES
S320
DEACTIVATE HUB ANNUNCIATOR
S322
CLEAR SENSOR MARK

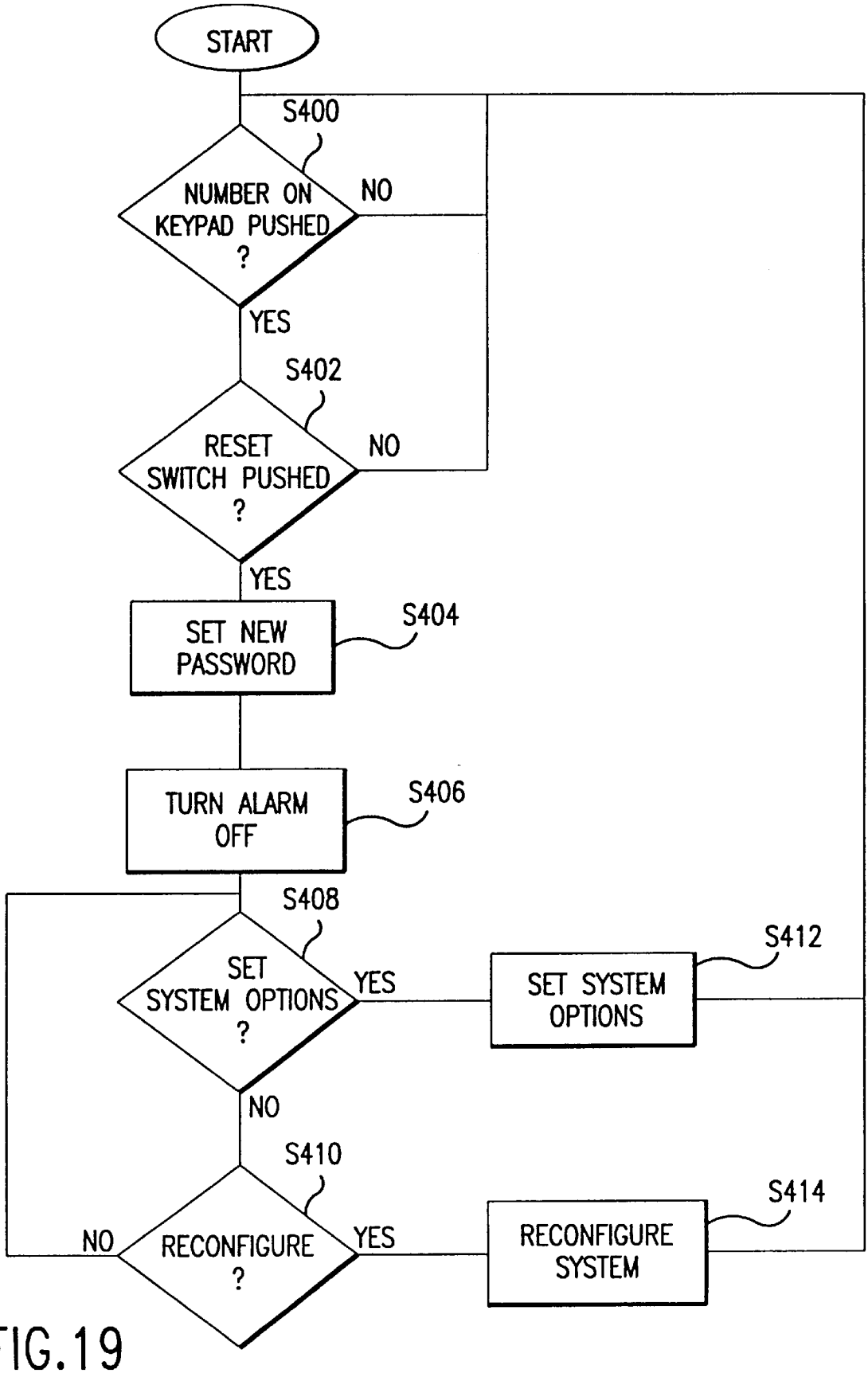
START
S400
NUMBER ON KEYPAD PUSHED ?
NO
YES
S402
RESET SWITCH PUSHED ?
NO
YES
SET NEW PASSWORD
S404
TURN ALARM OFF
S406
S408
SET SYSTEM OPTIONS ?
YES
SET SYSTEM OPTIONS
S412
NO
S410
RECONFIGURE ?
NO
YES
RECONFIGURE SYSTEM
S414

FIG.19

SECURITY SYSTEM WITH INTERMITTENT ALARM LOCATION DETECTION

This is a Continuation of application Ser. No. 08/441,925 filed May 16, 1995 now U.S. Pat. No. 5,726,627.

BACKGROUND

This invention generally relates to merchandise security systems.

Merchandise security systems are increasingly in demand due to the high cost of small and portable items such as tape players, video cameras and laptop computers, and the ease by which these items can be stolen from retailers. The majority of security systems protect items on display by adhering some form of sensor to the displayed items. Conventionally, a sensor is a simple switch having a protruding member which is depressed when the sensor is mounted onto the protected item, thus closing the switch. When a theft is attempted, the sensor is detached from the item thus opening the switch and causing an alarm to sound.

Some security systems connect sensors directly to a central unit while others group multiple sensors together for one location in a store and connect the grouped sensors to a local control box or a hub. For security systems having hubs, the sensors are wired to the hub using the hub cables through a jack. Each hub can accommodate multiple sensors. However, if less than the full capacity of sensors are connected to a particular hub, all unused sensor jack locations must be shunted via shunting plugs which emulate closed sensor switches.

The various hubs are connected to a central unit. When a sensor is activated, an alarm event is generated. The alarm event is detected by the control unit which causes the alarm to sound. When the alarm sounds, on some systems, a sensor indicator close to the sensor jack turns ON to indicate which sensor caused the alarm. After the alarm sounds, depressing the protruding member of the sensor generating the alarm event stops the sensor from generating further alarm events and turns the sensor indicator OFF, but the alarm is not stopped. The alarm can only be stopped by resetting the control unit.

Most conventional sensors utilize a switch which closes a sense loop when the sensor is attached to any flat surface. When the sensor is removed, the switch is opened, and the sense loop is opened causing an alarm event. This kind of sense loop scheme is susceptible to false alarms. A false alarm can occur, for example, when the plug connecting the sensor to the jack on the hub is temporarily misaligned causing the sensor to be temporarily disconnected from the hub. This disconnection opens the sense loop and is detected as an alarm event causing the control unit to set off the alarm, even though no theft is being attempted. In addition, the sensor indicator turns ON only when the sense loop is open. Accordingly, the sensor indicator turns ON and OFF intermittently for this kind of temporary disconnection. When the temporary misalignment recovers, the sensor indicator, if offered, turns OFF and all indications of the location of the misalignment are lost.

When a sensor is removed from a protected item, the sensor generates an alarm event because the sensor switch is open. A store attendant normally responds by disarming the alarm so that customers are not disturbed by the annoying alarm sound and notes the location of the sensor that caused the alarm as indicated by the sensor indicator, if offered. Then, the attendant determines whether the merchandise protected by the activated sensor has been stolen, or the sensor was compromised in some other manner. The store attendant corrects the alarm event condition by properly remounting the sensor onto the merchandise or disconnecting the sensor from the control unit if the sensor is damaged or defective. Only when the alarm event condition is corrected, can the security system be rearmed.

The above scenario is complicated by the occurrence of false alarms, such as misaligned jacks or improperly mounted sensors. When a false alarm of the intermittent variety occurs, the security system alarm is triggered. The store attendant goes through the normal steps attempting to locate and correct the cause of the alarm. However, since the cause of the alarm was only momentary, by the time the attendant reaches the control unit, the cause of the alarm has vanished and the sensor indicator, if offered, is OFF. Thus, the attendant is unable to identify the cause of the alarm. Since the alarm event no longer exists, the store attendant typically attempts to reset the control unit and if the system rearms, the store attendant assumes that only a false alarm had occurred.

This intermittent false alarm problem is exploited by shoplifters. The shoplifter first sets off the security system alarm by disconnecting a sensor from an article of merchandise. Then, after the alarm has sounded, the sensor is remounted onto the merchandise. When the store attendant checks for the location of the sensor causing the alarm, all the sensor indicators, if offered, are OFF. The store attendant assumes that the alarm was an intermittent false alarm and resets the control unit. Since the sensor was replaced by the shoplifter, alarm events are no longer generated and the security system alarm remains quiet.

Then, the shoplifter disconnects another sensor, causing a second alarm to sound, and again remounts the sensor back onto the merchandise. The store attendant again checks for the sensor that caused the alarm and, finding none, resets the control unit again thinking that another intermittent false alarm has occurred. This scenario is repeated several times until the store attendant simply assumes that the security system is too annoying to deal with, and turns the entire security system OFF. At this point, the shoplifter can steal any unprotected item from the previously protected and displayed items.

Further, a sensor plug can be removed from a hub and replaced by a shunting plug instead. The alarm will sound, even though none of the sensors have been removed from the protected merchandise. Since shunting plugs are normally used to shunt out unused jack locations, an attendant can easily overlook the additional shunting plug and rearm the control unit with the shunting plug replacing a sensor plug. The shoplifter is then free to remove the item previously protected by the now disconnected sensor.

SUMMARY OF THE INVENTION

It is an object of this invention to provide a security system which indicates the location of any sensor generating an alarm event even after the sensor stops generating the alarm event. In addition, shunting plugs are not used, so that the presence of a shunting plug on a hub immediately indicates tampering.

In order to achieve the above and other objects, this invention includes at least one sensor capable of detecting alarm events, at least one hub coupled to the at least one sensor and a control unit coupled to the at least one hub. A controller in the control unit activates at least one main alarm upon receiving alarm events detected by the at least one sensor and indicates a location of the at least one hub

and the at least one sensor that originated the alarm events. The controller saves the location of the at least one hub and the at least one sensor in a memory for a predetermined period of time, while allowing immediate system rearm. The controller reactivates the at least one alarm after the predetermined period of time when a cause of the alarm events continues to persist.

The controller configures the security system by determining how many hubs are connected to the control unit. The controller also determines the number of sensors that are connected to each connected hub and the locations of each sensor. The controller adds new sensors to the configuration as additional sensors are plugged into any hub. However, if a sensor is removed, the controller will sound an alarm.

This invention also provides a method for operating the security system. The method includes mounting at least one sensor to objects to be secured. After all the sensors are mounted, the security system is configured and armed. The security system detects alarm events by polling the at least one sensor for alarm events and sounding the at least one alarm based on the alarm events. Upon sounding the at least one main alarm, the control unit displays the location of the alarm events. The controller of the security system silences the main alarm when a password is entered and permits the security system to be disarmed. The controller sounds the at least one main alarm again when a predetermined period of time has elapsed after the security system is rearmed unless conditions causing the alarm events have been corrected.

BRIEF DESCRIPTION OF THE DRAWINGS

The invention will be described in detail with reference to the following drawings, wherein:

FIG. **1** is a diagram of the security system;

FIG. **2** is a block diagram of the control unit;

FIG. **3** is a schematic diagram of the power circuit shown in FIG. **2**;

FIG. **4** is a block diagram of the display unit shown in FIG. **2**;

FIG. **5** is a schematic diagram of the main alarm shown in FIG. **2**;

FIG. **6** is a block diagram of a hub shown in FIG. **1**;

FIG. **7** is a schematic diagram of the power circuit shown in FIG. **6**;

FIG. **8** is a schematic diagram of the connection block **476** shown in FIG. **6**;

FIG. **9** is a schematic diagram of the sensor interface shown in FIG. **6**;

FIG. **10** is a schematic diagram of the sensor pullup resistors shown in FIG. **6**;

FIG. **11** is a schematic diagram of a sensor loop;

FIG. **12** is a schematic diagram of the sensor indicator interface shown in FIG. **6**;

FIG. **13** is a schematic diagram of the hub alarm shown in FIG. **6**;

FIG. **14** is flowchart of the power ON process of the security system;

FIG. **15** is a flowchart of the key entry process;

FIG. **16** is a flowchart of the alarm ON process subroutine shown in FIG. **15**;

FIG. **17** is a flowchart of the alarm OFF process subroutine shown in FIG. **15**;

FIG. **18** is a flowchart of the sensor scan process; and

FIG. **19** is a flowchart of the reset switch process.

DETAILED DESCRIPTION OF PREFERRED EMBODIMENTS

FIG. **1** shows a preferred embodiment for a security system **100**. The security system **100** includes a control unit **300**, a plurality of hubs **400** and a plurality of sensors **200** coupled to the hubs **400**. Each sensor **200** may include an indicator **202**, an LED for this embodiment, and a sensor cable **204**. The sensor **200** is connected to a hub **400** by plugging the sensor cable **204** into a sensor jack **402**. Each hub **400** includes a plurality of sensor jacks **402** . Each hub **400** also includes a hub/sensor location annunciator **412** and an upstream jack **416** and a downstream jack **414**.

The downstream jack **414** is connected to another hub **400** by using hub connection cable **500**. The hub connection cable **500** is connected between the downstream jack **414** of one hub **400** and the upstream jack **416** of another hub **400**. In this manner a plurality of hubs **400** can be connected in a serial chain. The first hub **401** is connected to the control unit **300** by a control unit hub connection cable **502** connected to the upstream jack **416** of the first hub **401** and the control unit **300**.

FIG. **2** shows a block diagram of the control unit **300** having a controller **308**. The controller **308** detects alarm events generated by the sensors **200**. An alarm event indicates an alarm condition. The controller **308** stores each alarm event into an alarm event memory **323**. The contents of the alarm event memory **323** are carefully controlled by the controller **308** so that location information for each alarm event is provided when needed to correct alarm conditions causing the alarm events. The contents of the alarm event memory **323** are not reset unless an operator consciously does so and the alarm conditions causing the alarm events are corrected.

The controller **308** verifies the status of a power circuit **318** through signal lines **309** and **311**. The signal line **309** indicates whether an external battery (not shown) is operational. The signal line **311** indicates whether a DC converter is supplying power to the security system **100**.

FIG. **3** shows a schematic diagram of the power circuit **318**. Power is supplied to the power circuit **318** by the battery through power lines **320** and **322**. Power line **320** is connected to the positive terminal of the battery and power line **322** is connected to the negative terminal of the battery and serves as a ground terminal for the power circuit **318**. The condition of the battery is sensed by a battery voltage detector **612** through resistors R**42** and R**43**. The battery voltage detector **612** outputs a low battery detection signal on signal line **309** to the controller **308**. The signal line **309** is connected through a pull-up resistor R**44** to a regulated supply voltage terminal **465**. The regulated supply voltage value is V_{cc}. The power line **320** supplies power to the control unit **100** through diode D**3**.

The DC converter (not shown) supplies power to the security system **100** through jack J**1**. The power from the DC converter flows through the jack J**1** through diode D**2** onto power line **357**. The diodes D**2** and D**3** prevent power from returning into the DC converter or the battery, respectively, so that a failure condition of either the DC converter or the battery will not drain power from the security system **100**. The resistor R**47** provides a trickle charge to the battery from the power line **357**. Power from the power line **357** is distributed throughout the security system **100**. The power terminal **464** indicates that power is supplied from the power line **357**.

A signal line **306** is connected to the indicator D**4** at the connection between the indicator D**4** and the resistor R**46**.

The indicator D4 may be located close to a display unit **302**. The indicator D4 indicates that the DC converter is supplying power to the security system **100**.

The controller **308** detects that the DC converter is supplying power to the security system **100** through signal line **311**. The DC converter drives the indicator D4 through resistors R45 and R46.

The controller **308** indicates that the security system **100** is armed by flashing indicator D5 through the signal line **313**. The indicator D5 is driven by transistor T9 and connected to the signal line **313**. The emitter of the transistor T9 is connected to ground through resistor R48 and the indicator DS while the collector is connected directly to the positive terminal of the battery through power line **320**. When the signal line **313** is HIGH, the transistor T9 draws current from the power line **320** driving the indicator D5 through the resistor R48 turning the indicator D5 ON. However, if the battery is disconnected from the power line **320** or the battery voltage is low and the signal line **313** is HIGH, then the transistor T9 will lower the voltage sensed by the battery voltage detector **612** setting off a battery low signal on the signal line **309**.

A signal line **314** is connected to the indicator D5 at the connection between the indicator D5 and the resistor R48. The D5 may be located close to the display unit **302**.

The control unit **300** includes the display unit **302** and a keypad **304**. Information such as passwords and commands are entered through the keypad **304**. The control unit **300** displays the entered information as well as other data such as alarm event locations using the display unit **302**.

FIG. **2** shows a conventional keypad **304** connected to the controller through signal line **307**. The signal line **307** has 7 conductors accommodating four row signals and three column signals having numeric keys of 0–9, and an "*" and a "#". Depressing a key on the keypad connects a row signal to a column signal and is detected by the controller **308**.

A reset switch **312** is also connected to the controller **308** through signal line **305**. When the reset switch **312** is depressed, the keypad signal line **315** is connected with signal line **305** which signals the controller **308** to accept entries for new passwords without verification. The reset switch **312** is located in a protected location so that security is not compromised.

The display unit **302** is connected to the controller **308** through signal line **301**. As shown in FIG. **4**, the signal line **301** is input to a display shift register **319**. Commands from the controller **308** are serially shifted into the display shift register **319** which in turn outputs the commands in parallel to the display driver **315** which drives the display **317**.

When an alarm event occurs, the controller causes the main alarm **310** to sound an alarm by a signal through signal line **303**. FIG. **5** shows a schematic for the main alarm **310** which includes six logic inverters in one package **624** (inverter pack), a doubling transformer TR1 and an alarm unit **614**. The six logic inverters are connected in parallel for greater current drive capability. The single package **624** of the six logic inverters are powered through power line **360** connected to the power terminal **464**. The ground terminal of the inverter pack **624** is connected to ground line **362** which is switched to the ground through transistor T2. The transistor T2 is controlled by the controller **308** through signal line **303** and resistor R41. When the signal line **303** is LOW, the transistor T2 is turned OFF disconnecting the ground line **362** from the ground and preventing power from flowing through the inverter pack **624**. Thus, when the signal line **303** is LOW, the alarm is turned OFF. When the controller **308** sets the signal line **303** to HIGH, the transistor T2 is turned ON and connects the ground line **362** to ground. Thus, when signal line **303** is HIGH, power flows into the inverter pack **624** through power line **360** and the main alarm **310** is turned ON.

The six inverters of the inverter pack **624** are separated into two groups. The first group of three inverters are connected in parallel with signal line **628** as input and signal line **626** as output. The second group of three inverters are also connected in parallel together with the signal line **626** as input and signal line **618** as output. Thus, the signal on the signal line **626** corresponds to the signal on the signal line **628** and **618** but inverted.

One end of the doubling transformer TR1 is connected to the signal line **620** which is coupled to the signal line **626** through capacitor C9. The center tap of the doubling transformer TR1 is connected to the signal line **618**. Thus, half of the doubling transformer TR1 is driven by the second group of inverters. When the alarm is operating, the signal across the signal lines **616** and **620** is twice the amplitude as the signal across signal lines **618** and **620**. Thus, the alarm unit **614** which is connected between the signal lines **616** and **620** through capacitor C9 receives twice the amplitude of the signal generated by the second group of inverters.

The signal line **622** is connected to a feedback terminal of the alarm unit **614**. A feedback signal on signal line **622** which is connected to signal line **628** through resistors R40 and R38 provides positive feedback to the inverters of the inverter pack **624**. When the transistor T2 switches the ground line **362** to ground, noise occurring at the input of the first group of inverters on the signal line **628** causes the six inverters of the inverter pack **624** to oscillate in conjunction with the alarm unit **614** generating an alarm. Capacitor C10 and resistor R39 are provided to limit the oscillation so that voltages do not reach levels harmful to the components of the main alarm **310** and to maintain oscillation only at the self-resonant frequency at the alarm unit **614**.

FIG. **2** also shows a relay **321** connected to the controller **308**. The controller **308** activates the relay circuit **321** through signal line **319**. The relay **321** provides a normally closed and a normally open contacts so that external functions such as alerting a police station or activating other alarms can be controlled by the controller **308**.

The controller **308** is connected to the first hub **401** through a control unit jack **314** which includes signal lines 351–358. The power circuit **318** supplies power to the hubs **400** through the power line **357**. The ground line **358** supplies a common ground for all the hubs **400**.

Signal lines **351** through **356** comprise the communication lines between the controller **308** and the hubs **400**. Each of the control line 351–356 is buffered from the controller through resistors R30 through R37. These resistors R30–R37 protect the controller **308** from external shorts which may occur if one of the hub connection cables **500** or the cable **502** connecting the control unit **300** and the first hub **401** is cut.

A load signal and a clock signal are supplied by the controller **308** to the hubs **400** through signal lines **353** and **354**. The controller **308** receives sensor data from a first hub **401** through signal line **356** and control data from the first hub **401** through signal line **355**. The controller **308** outputs sensor data and control data through signal Lines **352** and **351**, respectively.

Resistor R32 connects between the control data output signal line **351** and the control data input from the first hub line **355**. This permits the controller **308** to detect that the

cable **502** between the control unit and the first hub **401** has been cut. The resistor value R**32** is selected so that when the cable **502** is not cut, the control data from the first hub **401** will be input to the controller through resistor R**30** without being affected by the data that is on the control data output signal line **351**. However, if the cable **502** is cut, then the control data output on signal line **351** is directly fed back to the controller **308** through resistor R**32** and resistor R**30**. A similar connection is made for the sensor lines **352** and **356** through resistor R**33** and R**31**.

The control unit **300** is disposed within a control unit box (not shown). Two tamper switches **317** protect the control unit box from unauthorized access. When the control unit box is closed, the tamper switches **317** are depressed allowing the signal line **355** to be connected to the controller **308** through resistor R**30**. However, when the control unit box is open, the tamper switches **317** disconnect signal line **355** from the controller **308**. If the control unit box is opened without proper authority, the controller **308** will set off the main alarm **310**.

The reset switch **312** is located inside the control unit box. Thus, the reset switch **312** cannot be used to enter a new password if the control unit box is closed. However, if the control unit box is opened without authority, the main alarm **310** is sounded. Accordingly, the only condition that the reset switch **312** can be used without activating the main alarm **310** to enter a new password is by opening the control unit box with proper authority.

FIG. **6** shows a block diagram of the hub **400**. Each hub **400** is connected with either the control unit **300** or a hub **400** through the upstream jack **416** and/or a hub **400** through the downstream jack **414**. The last hub **403** is connected only to one other hub **400** through the upstream jack **416**. Hubs **401** and **403** are identical to the hubs **400**. The only exceptions are that the hub **401** is connected to the control unit **300** and the hub **403** is the last hub **403** in the chain of hubs **400**. Accordingly, all reference to hubs **400** also apply to the hubs **401** and **403**.

Each hub **400** has an output shift register **422**, an input shift register **424**, and a hub annunciator **412**. The hub **400** is connected to the sensors **200** through sensor jacks **402**. Each sensor jack **402** is provided with a sensor pull up resistor **432** through signal lines **472**. The sensor indicator **202** is controlled by the output shift register **422** through signal line **478** which is coupled to the sensor indicator **202** through a sensor indicator interface **430** over signal line **471**. An alarm event from each sensor **200** is detected on signal line **474** through the sensor interface **470** which is connected to the input shift register **424** over signal line **477**. Each sensor **200** is also supplied with a ground line **479**.

The hub annunciator **412** is reset by reset switch **428** through signal line **434**. The reset switch **428** is connected to the input shift register **424** through signal line **435**. The reset switch **428** does not directly reset the hub annunciator **412**, but sends a signal to the controller **308** that the reset switch **428** is activated. The controller **308** turns off the hub annunciator **412** when all the requirements for turning OFF the hub annunciator **412** are met as will be described later.

The hub **400** receives power from the upstream jack **416** through a hub power circuit **434**. As shown in FIG. **7**, the hub power circuit **434** receives power from line **457** which is derived directly from the upstream jack **416**. Power is input into the hub through diode D**1**. The cathode of the diode D**1** is connected to capacitor C**7** and voltage regulator **610** through power line **463**. The power from the power line **463** is distributed directly to the rest of the hub **400** by connecting to power terminal **564**. The regulator **610** outputs a regulated supply voltage V_{cc} onto supply voltage terminal **565**. The regulated supply voltage V_{cc} is stabilized by capacitor C**8**. Elements of the hub **400** receives regulated power by simply connecting to the supply voltage terminal **565**.

The output and input shift registers **422** and **424** are connected to the upstream jack **416** and downstream jack **414** through connection block **476**. The output shift register is connected to connection block **476** through signal line **461** and the input shift register **424** is connected to the connection block **476** through signal line **462**.

FIG. **8** shows that the output shift register **422** is connected directly to the load signal line **453** and clock signal line **454** through resistors R**53** and R**52**, respectively. The control data output from either the control unit **300** through the signal line **451** and R**15** or a downstream hub **400** is input to the output shift register **422** through signal line **455***b* and resistor R**51**. Control data is output from the output shift register **422** to an upstream hub **400** or the control unit **300** through signal line **455***a* and resistor R**50**.

The load and clock signals on the signal lines **453** and **454** are input into the input shift register **424** through resistors R**53** and R**52**, respectively. The sensor data are output from either the control unit **300** through the signal line **452** and R**16** or a downstream hub **400** through signal line **456***b* and resistor R**55**. The input shift register **424** outputs sensor data to an upstream hub or the control unit **300** through signal line **456***a* and R**54**. The control data signal line **455***b* on the last hub **403** receives the control data from the control unit **300** on signal line **451** through resistor R**15**. The sensor data signal line **456***b* on the last hub **403** receives the sensor data from the control unit **300** on signal line **452** through resistor R**16**. R**15** and R**16** allow the control data and the sensor data to be received from the control unit **300** even if the hub connection cable **500** connecting the downstream jack **414** to a downstream hub **400** has been cut.

FIG. **9** shows a circuit diagram for the sensor interface **470**. The sensors **200** for each hub **400** are connected to the input shift register **424** on signal lines 601–606 through series resistors R7–R12, respectively. The signals on signal line **474** are filtered by capacitors C1–C6. Resistors R1–R6 are used to charge the capacitor C1–C6 immediately after power on. After the capacitor C1–C6 are charged, resistors R1–R6 serve as pull-down resistors to drain the capacitors C1–C6 when either the sensors **200** are disconnected from the hub **400** or when the sensors **200** detect an alarm event.

The control unit **300** first shifts into the output shift register **422** a value setting the signal line **473** to HIGH. When the signal line **473** is HIGH the capacitor C1–C6 are charged through resistors R1–R6, respectively. After the capacitors C1–C6 are charged, the controller **308** shifts into the output shift register **422** a value setting the signal line **473** to LOW. When the signal line **473** is LOW, resistors R1–R6 drain the capacitors C1–C6 unless the sensor switches are closed connecting sensor pull-up resistors **432** to the signal line **474**.

FIG. **10** shows a schematic of the sensor pull-up resistors **432**. Resistors R24–R29 connect each of the sensor switches to the supply voltage terminal **565**.

FIG. **11** shows a complete sensor circuit connected to signal line **606** of the input shift register **424**. Immediately after power ON, signal line **473** is set to HIGH. When signal line **473** is HIGH, the capacitor C**1** is charged through R**1**. After the capacitor C**1** is charged, the signal line **473** is set to LOW. When the signal line **473** is LOW, resistor R**1** is

effectively grounded and the capacitor C1 is charged through the sensor pull-up resistor R29 through resistor R12. The values of the resistors R1, R12 and R29 are set such that the signal on signal line **606** is HIGH. When the sensor **200** detects an alarm event, the sensor switch is opened and disconnects resistor R29 from resistor R12. In this condition, the capacitor C1 is discharged through resistors R1 setting the signal line **606** to LOW. When the LOW signal on the signal line **606** is shifted back to the controller **308**, the controller **308** will sound the main alarm **310**. This sensor circuit will operate similarly if the sensor switch resistor temporarily shorts the sensor switch connection to resistor R12 to ground. The values of resistor R12 and capacitor C1 are set so that a momentary pulse to ground is detected.

FIG. **12** shows the sensor indicator drive **430**. Sensor indicators **202** are driven by transistors T3–T8 through resistors R17–R22. The controller **308** controls the lighting of the sensor indicator **202** by shifting control bits into the output shift register **422** setting the values of the signals on signal line **478**. When the corresponding signal of signal line **478** is HIGH, the respective transistors T3–T8 drive the sensor indicators **202** through the corresponding resistor R17–R22 turning the respective indicator ON. When the signal on the signal lines **478** is LOW, the corresponding transistor T3–T8 stops driving the sensor indicator **202** turning OFF the corresponding sensor indicator **202**.

The sensor indicators **202** indicate that the sensors **200** are connected to the hub **400** and are flashed a number of times corresponding to the jack location on the hub **400**. The sensor indicators **202** can be turned OFF for various reasons such as conserving battery power and, in the case where no sensor indicators **202** are provided, no indications are provided at the sensors **200**.

FIG. **13** shows a circuit diagram of the hub annunciator **412** and a circuit for the switch **428**. The controller **308** issues an annunciation command by setting the signal line **434** to HIGH. The transistor T1 is turned ON through resistor R13. When the transistor T1 is ON, power is input to the piezoelectric/speaker **412** thus annunciating a tone.

When the hub annunciator **412** is activated and the hub reset switch **408** is depressed, the hub reset switch **408** connects signal line **434** to signal line **435**. Normally when the hub reset switch **408** is open, the signal line **435** is maintained at LOW by resistor R14. However, when the signal line **434** is HIGH and the switch **408** is depressed, the signal line **435** is set to HIGH. The signal on the signal line **435** is input to the input shift register **424**. The controller **308** reads the value of the signal on the signal line **435** by shifting the input shift register **424**. If the security system **100** has been disarmed after an alarm is sounded and a time delay has elapsed, then a HIGH on the signal line **435** will cause the controller **308** to set the signal on the signal line **434** to LOW turning off the hub annunciator **412**.

The indications D4 and D5 and the sensor indicator **202** may be implemented using LEDs. Any other type of indicators may also be used without affecting any aspects of the invention.

TABLE 1

DISPLAY	SYSTEM OPTION
P0	Continuous Main Alarm Tone
P1	Pulsed Main Alarm Tone
A0	Key Pad Alarm Reset Disabled
A1	Key Pad Alarm Reset Enabled

TABLE 1-continued

DISPLAY	SYSTEM OPTION
0L	Sensor Indicator Disabled
1L	Sensor Indicator Enabled
0A	DC Converter Failure Detection Disabled
1A	DC Converter Failure Detection Enabled

Table 1 shows the system options that can be set by entering the information through the key pad **304**. The left column of Table 1 shows the characters that are displayed on the display unit **302**.

The main alarm **310** of the security system **300** can be optionally set to sound in a continuous alarm tone or to sound in a pulsed alarm tone corresponding to displays P0 and P1, respectively. After an alarm is sounded and the control unit **300** is reset, the hub annunciator **412** is activated. The hub annunciator **412** indicates the jack location of the sensor that generated the alarm event by sounding a number of times equal to the sensor jack number, synchronized to the flashing of the indicator **202**. The hub annunciator **412** can be reset by pushing the reset button **408** on the hub **400**. However, an option is provided to reset the hub annunciator **412** using the key pad **304** on the control unit **300** instead. The display unit **302** displays A0 or A1 corresponding to the keypad alarm reset option being disabled or enabled, respectively.

The security system **300** also provides an option to enable or disable the sensor indicator **202** for each sensor **200**. When the sensor indicator is enabled, the control unit **308** flashes each sensor indicator the number of times equal to the sensor jack number of that sensor. When the sensor indicator is disabled, the controller **308** turns all sensor indicators OFF. The display unit **302** displays 0L or 1L corresponding to the sensor indicator being disabled or enabled, respectively.

TABLE 2

DISPLAY	SYSTEM OPTION
—	Reconfiguration Enabled
00	Tamper Switch Open
07	No Hubs Connected
<h>7	Hubs <h> and following are missing; <h> is Hub Number
LP	Battery Power is low
AP	DC converter not Operating or Connected
<h><s>	Alarm Event at <h> Hub Number <s> = Sensor Number
L<c>	Password Digit <c>; <c> is a number from 0–9
L-	Waiting for First New Password Number

The security system **300** also provides the option to disable or enable the DC converter failure detection mechanism. When the DC converter failure detection mechanism is enabled, the controller **308** senses the status of the DC converter through signal line **311**. If the controller **308** detects that the DC converter is not operating, the controller **308** indicates the alarm event by sounding the main alarm **310**. The display unit **302** displays 0A or 1A corresponding to the DC converter failure detection being disabled or enabled, respectively.

Table 2 shows the characters displayed on the display unit **302** for a plurality of system conditions. When the controller **308** detects no alarm conditions either currently or during a

previous predetermined period of time, the controller **308** indicates that the security system may be reconfigured by displaying two dashes "--" on the display unit **302**.

When the controller **308** detects that the tamper switches **317** are open, the main alarm **310** is sounded and the display unit **302** displays "00." The tamper switches **317** protect the control unit box from being opened without proper authorization.

When the first hub **401** is disconnected from the control unit **300**, the controller **308** sounds the main alarm **310** and displays "07" on the display unit **302**. When the controller **308** detects that other hubs **400** are missing, the controller **308** sounds the main alarm **310** and displays the number of the hub **400** followed by a "7". Since the hubs **400** are connected in a serial chain from the control unit **300** to the last hub **403**, the hub number is the position of the hub starting with 1 corresponding to the first hub **401**.

When the controller **308** detects that the battery is not operating or the voltage has dropped below a predetermined level, the controller **308** displays "LP" on the display unit **302**. When the controller **308** detects that the DC converter is not operating, the controller **308** displays "AP" on the display unit **302**.

When the controller **308** detects alarm events, the controller **308** displays the hub number and the sensor number having generated the alarm event. Thus, if the sensor **200** connected to sensor jack **2** of hub **4** detected an alarm event, the controller **308** displays "42" on the display unit **302**. If more than one sensor **200** detects an alarm event, the sensors **200** connected to the lowest hub number having the lowest jack number is displayed first. After the alarm event condition for the first displayed sensor is acknowledged, the controller **308** displays the next sensor **200** that detected an alarm event. This process continues until all the alarm event conditions have been acknowledged.

The controller **308** provides a method for entering a new password. When receiving a new password, the controller **308** displays an "L" followed by a number that is entered through the keypad **304**. When the password entry process begins, the controller **308** first displays "L-" indicating that the controller **308** is waiting for the first digit of the new password.

FIG. **14** shows a flow chart of the controller **308** process after the security system **300** is powered on. After power on, the controller **308** goes to step **S100**. In step **S100**, the controller **308** sets the password to "**0000**". The controller **308** enables the pulsed tone option for the main alarm **310**, disables the keypad reset option, disables the sensor indicator option and disables the DC converter failure detection option. Then the controller **308** continues to step **S102**.

In step **S102**, the controller **308** configures the security system **100**. The controller **308** configures the security system **100** by determining all the hubs **400** that are connected to the control unit **300**. Then, the controller **308** determines all the sensors **200** that are connected to each hub **400**. The controller **308** stores the system configuration comprising all the hubs and sensors in a controller memory (not shown) which enables the controller **308** to detect when a sensor **200** or a hub **400** is removed from the security system **100**. However, if new hubs **400** or new sensors **200** are added to the system, the controller **308** automatically updates the system configuration to account for the additional hubs and sensors **400** and **200**, respectively. After configuring the system, the controller **308** continues to step **S110**.

In step **S110**, the controller **308** starts three concurrent processes. The flow chart for the keypad scan process is shown in FIG. **15**, the flow chart for the sensor scan process is shown in FIG. **18** and the flow chart for reset switch scan is shown in FIG. **19**. After starting the three concurrent processes, the controller **308** continues to step **S104**.

In step **S104**, the controller **308** checks if an operator has armed the security system **100**. If the operator has not armed the security system **100**, the controller **308** jumps to step **S106**; otherwise, the controller **308** goes to step **S108**.

In step **S106**, the controller **308** checks if a rearm timer set to a predetermined amount of time has expired. If the timer has not expired, the controller **308** returns to step **S104**. However, if the timer has expired, the controller **308** goes to step **S108**.

In step **S108**, the controller **308** arms the security system **100**. When the security system **100** is armed, all the alarms of the security system **100** are enabled to sound based on the occurrence of alarm events. When the security system **100** is disarmed, the alarms of the security system **100** will not sound even though an alarm event occurs. However, the security system **100** continues to scan all the sensors for alarm events independent of whether the security system **100** is armed or disarmed.

FIG. **15** is a flow chart of the key scan process. After the key scan process is started by the controller **308** at step **S110**, the controller **308** goes to step **S200**. In step **S200**, the controller **308** checks if any key of the keypad **304** is depressed. If none of the keys is depressed, the controller **308** returns to step **S200** and checks if a key is depressed again. If a key on the keypad **304** is depressed, the controller **308** goes to step **S202**.

In step **S202**, the controller **308** verifies if the first four numeric key entries form a correct password. If the first four numeric key entries do not match the correct password, the controller **308** goes to step **S206**. If the first four numeric key entries match the correct password, the controller **308** jumps to step **S204**.

In step **S206**, the controller **308** increments a password attempt counter. Then, the controller **308** goes to step **S201** where the controller **308** checks if the password attempt counter exceeded a preset limit. If the password attempt counter does not exceed the preset number, the controller **308** returns to step **S200**; otherwise, the controller **308** goes to step **S214**.

In step **S214**, the controller **308** sounds a warning signal. Then, the controller **308** goes to step **S216**. In step **S216**, the controller **308** resets the password attempt count to 0 and goes to step **S218**.

In step **S218**, the controller **308** waits for a preset amount of time. After the preset amount of time expires, the controller **308** stops the warning signal, and returns to step **S200**.

In step **S204**, the controller **308** checks if there were any alarm events that occurred during a previous predetermined period of time. If there were no alarm events that occurred during this previous predetermined period of time, the controller **308** goes to step **S212**; otherwise, the controller goes to step **S208**.

In step **S208**, the controller **308** performs the alarm ON process shown in FIG. **16**. In step **S212**, the controller **308** performs the alarm OFF process shown in FIG. **17**.

FIG. **16** shows the alarm ON process in greater detail. When the controller **308** starts the alarm ON process, the controller **308** goes to step **S1000**. In step **S1000**, the controller **308** silences the main alarm **310**. Then the controller **308** goes to step **S1002**.

In step S1002, the controller 308 checks if an operator desires to disarm the security system 100 by depressing the "*" key on the keypad 304. If the "*" on the keypad 304 was pressed, the controller 308 goes to step S1004; otherwise, the controller goes to step S1006.

In step S1004, the controller 308 disarms the security system 100. Then the controller 308 returns and goes to step S200.

In step S1006, the controller 308 checks if the "#" key was pressed. If the "#" key was not pressed, then the controller 308 goes to step S1004; otherwise, the controller 308 goes to step S1008. In step S1004, the controller 308 disarms the security system 100 and returns to step S200.

In step S1008, the controller 308 checks if the keypad reset option is enabled. If the keypad reset option is not enabled, then the controller 308 jumps to step S1012; otherwise, the controller 308 goes to step S1010.

In step S1010, the controller 308 clears a sensor mark. The sensor mark is an indicator in the controller memory maintained by the controller 308 to indicate that a corresponding sensor had generated an alarm event during the previous predetermined period of time. After clearing this sensor mark, the memory of prior alarm events generated by the corresponding sensor is removed. However, if the sensor mark is not cleared, the controller 308 continues to remember that an alarm event was generated by the corresponding sensor 202.

In step S1012, the controller 308 arms the security system 100 and then returns to step S200.

FIG. 17 shows the flow chart of the alarm OFF process subroutine in greater detail. When step S212 is entered, the controller 308 goes to step S2000. In step S2000, the controller 308 checks if the "0" key is pressed indicating that the operator desires to set a new password. If the key "0" is pressed, the controller 308 goes to step S2002; otherwise, the controller 308 goes to step S2004.

In step S2002, the controller 308 allows the operator to set a new password. Then the controller goes to step S2006. In step S2006, the controller 308 checks if "8" is pressed indicating that the operator desires to reconfigure the system. If the key "8" is pressed, the controller 308 goes to step S2012; otherwise, the controller 308 goes to step S2010.

In step S2010, the controller 308 sets the system options shown in Table 1 above based on operator inputs through the keypad 304. After the system options are set, the controller 308 returns to step S200.

In step S2012, the controller 308 reconfigures the security system 100. After the security system 100 is reconfigured, the controller 308 returns to step S200.

In step S2004, the controller 308 checks if key "8" is pressed to indicate the desire to reconfigure the system. If the key "8" is pressed, the controller 308 goes to step S2008; otherwise, the controller 308 returns to step S200. In step S2008, the controller reconfigures the security system and then returns to step S200.

FIG. 18 shows the flow chart for the sensor scan process. After the controller 308 starts the sensor scan process in step Sl0, the controller 308 goes to step S300. In step S300, the controller 308 polls all the sensors of the current security system configuration by scanning control and sensor data signals through the shift registers 422 and 424 of each hub 400 and receiving sensor status back from the input shift registers 424 of the hubs 400. Based on the data returned from the sensors 200, the controller 308 determines whether any new alarm events have occurred since the last polling period. After the controller 308 scans the sensors 200, the controller 308 goes to step S302.

In step S302, the controller 308 checks if any new alarm events have occurred. A new alarm event occurs when a sensor generates an alarm event that is detected by the controller 308 for the first time. If new alarm events have occurred, the controller goes to step S306; otherwise, the controller goes to step S304.

In step S306, the controller 308 sets the sensor marks corresponding to each sensor that is generating a new alarm event. Once set, the sensor mark is not removed until the operator consciously resets the sensor mark by using the keypad reset feature or using the hub reset switch 408. After the controller 308 sets the sensor marks, the controller 308 goes to step S310.

In step S310, the controller 308 checks if the security system 100 is armed. If the controller system 100 is armed, then the controller 308 goes to step S314; otherwise, the controller 308 goes to step S311.

In step S314, the controller 308 stops any hub annunciations and sounds the main alarm 310. After sounding the main alarm 310, the controller 308 returns to step S300 and repeats the sensor scan process.

In step S304, the controller 308 checks if a rearm timer has expired. The rearm timer is set to a predetermined period of time after a current alarm is silenced. If the predetermined period of time expires, the controller 308 goes to step S305; otherwise, the controller 308 goes to step S308.

When one of the sensors 200 generates an alarm event, the controller 308 marks the sensor by setting a sensor mark and an old alarm event flag corresponding to the sensor 200. After the operator disarms the security system, the controller 308 sounds the hub annunciator 412. The operator then has the option of either resetting the hub annunciator 412 by using the keypad reset option or going to the hub physical location and depressing the hub reset switch 408. When the hub annunciator 412 is reset by either of the above methods, the sensor mark is reset, however, the old alarm event flag is still set. When the controller 308 reaches step S302 and checks for new alarm events, the controller 308 compares the current alarm event status with the old alarm event flag for each sensor 200 in the security system configuration. If a sensor 200 is generating a current alarm event and the old alarm event flag is set, then this alarm event is not new. However, if the old alarm event flag is not set, then the current alarm event is new and the controller 308 goes to step S306 and sets the sensor mark corresponding to the sensor.

In step S305, the controller 308 clears all the old alarm event flags for all the sensors 200 that are in the security system's current configuration, arms the security system 100 and returns to step S300. Thus, when the controller 308 reaches step S306, all alarm events are considered new and the security system 100 is armed. Accordingly, the main alarm 310 will be sounded at step S314 when any alarm event is detected.

In step S308, the controller 308 checks if the main alarm 310 is currently sounding. If the main alarm 310 is currently sounding, then the controller 308 returns to step S300; otherwise, the controller 308 goes to step S311. In step S311, the controller 308 checks if any sensor marks are set. If no sensor marks are set, then the controller 308 returns to step S300; otherwise, the controller 308 goes to step S312.

In step S312, the controller 308 activates the next hub annunciator 412. The hub annunciator 412 is not activated unless the main alarm 310 is silenced. Thus, when an alarm

event occurs, the controller **308** sounds the main alarm **310**. The operator responds by entering the password which is processed by the controller **308** in step S**202**. The controller **308** will follow the process shown in FIG. **15** and come to step S**1000** shown in FIG. **16**. The controller **308** silences the alarm in step S**1000** and if the operator chooses, the controller **308** disarms the system in step S**1004**. Accordingly, when the scanned sensor process comes to step S**310**, the security system **100** is disarmed allowing the controller **308** to activate the hub annunciator **412** in step S**312**. After the controller **308** sounds the hub annunciator **412**, the controller **308** goes to step S**316**.

In step S**316**, the controller **308** waits for a predetermined amount of time. This time is set so that the hub annunciator **412** cannot be reset immediately after it begins to sound. This prevents a knowledgeable thief from silencing the hub annunciator **412** immediately while the operator is still at the control unit location. After the step S**316**, the controller **308** goes to step S**318**.

In step S**318**, the controller **308** checks if the operator desires to reset hub annunciator **412**. The hub annunciator **412** can be reset by either pressing the reset switch **408** or by using the keypad reset feature if enabled. If the hub annunciator **412** is not reset, the controller **308** returns to step S**300** leaving the hub annunciator **412** activated; otherwise, the controller **308** goes to step S**320**.

In step S**320**, the controller **308** deactivates the hub annunciator **412**. Then the controller **308** goes to step S**322**. In step S**322**, the controller **308** clears the sensor mark corresponding to the sensor that caused the alarm event associated with the specific sensor at the hub **400** activating the hub annunciator **412**. After step S**322**, the controller **308** returns to step S**300**.

Therefore, the controller **308** will process steps S**311**, S**312**, S**316**, S**318**, S**320** and S**322** until all the sensor marks are cleared. This process encourages the operator to deal with each alarm event until all the alarm events are intentionally reset and the condition causing each alarm event is corrected.

If the predetermined time period of step S**304** expires before all the sensor marks are cleared, then the main alarm **310** will be sounded by step S**314**. However, the sensor marks will be set again unless the corresponding sensor stops generating alarm events. Thus, after the second sounding of the main alarm **310** is stopped and the security system **100** is disarmed, the controller **308** returns to step S**311** and continues to activate the hub annunciators **412** until all the sensor marks are cleared.

FIG. **19** shows the flow chart for the reset switch scan process. After the controller **308** starts the reset switch scan process in step S**110**, the controller **308** goes to step S**400**. In step S**400**, the controller **308** checks if a numeral key on the keypad **304** is pressed. If a numeral key is not pushed, the controller **308** returns to step S**400**. If a numeral key is pressed, the controller **308** goes to step S**402**.

In step S**402** the controller **308** checks if the reset switch **312** is pressed. If the reset switch **312** is not pressed, the controller **308** returns to step S**400**. Concurrently, the controller **308** processes the keypad scan process shown in FIG. **15**. While the reset switch scan process returns to step S**400**, the controller **308** goes to step S**202** in the key scan process and checks to see if the keystrokes entered a correct password. If the reset switch **312** is pressed, the controller **308** goes to step S**404**.

In step S**404**, the controller **308** sets the new password based on the operator keypad entries. The controller **308** does not compare the entered password with a correct password. Rather, the controller **308** enters the keystrokes as the new password. After the password is set, the controller **308** goes to step S**406**.

In step S**406**, the controller **308** silences the main alarm **310** and goes to step S**408**. In step S**408**, the controller **308** checks if the operator desires to set the system options. If the operator desires to set the system options, the controller **308** goes to step S**412**, otherwise, the controller goes to step S**410**.

In step S**412** the controller **308** enables the operator to set the system options. After the operator sets the system options, the controller **308** returns to step S**400**.

In step S**410**, the controller **308** checks if the operator desires to reconfigure the system. If the operator desires to reconfigure the system, the controller **308** goes to step S**414**; otherwise, the controller returns to step S**408**.

In step S**414**, the controller **308** reconfigures the system. After the system is reconfigured, the controller **308** returns to step S**400**.

While this invention has been described in conjunction with specific embodiments thereof, it is evident that many alternatives, modifications and variations will be apparent to those skilled in the art.

In particular, hubs **400** need not be used to group sensors **200** locally. The hub annunciator functions can be performed by either the main alarm **310** or any number of other alarms or annunciators. The sensors **200** can be connected directly to the control unit **300** and the locations of each sensor generating alarm events could be simply the sensor number.

Further, the main alarm **310** and the hub annunciator **412** need not be audible. Any indicator indicating that an alarm event occurred is sufficient for a main alarm **310** and any indicator at the hubs **400** that identifies the specific sensor **200** that generated an alarm event is sufficient for a hub annunciator **412**. Thus activating and re-activating the main alarm and hub annunciators **310** and **412**, respectively is equivalent to sounding these alarms/indicators/annunciators.

Accordingly, the preferred embodiments of the invention as set forth herein are intended to be illustrative, not limiting. Various changes may be made without departing from the spirit and scope of the invention as defined in the following claims.

What is claimed is:

1. A method for operating a merchandise security system wherein a plurality of sensors are attached to a plurality of objects to be secured, a set of sensors within the plurality of sensors being connected to a corresponding hub, each hub being connected to a security system controller, each sensor or hub generating an alarm event when separated from the controller or object to be secured, the method comprising the steps of:

activating the controller to sense alarm events;

generating an alarm event when at least one sensor or hub is separated from the controller or object to be secured;

storing a location of a sensor or hub generating an alarm event; and

displaying the location of the sensor or hub generating the alarm event at the controller.

2. The method of claim **1**, wherein the sensors connected to a hub are each assigned a separate sensor number and the hubs connected to the controller are each assigned a separate hub number, and wherein the step of displaying the location includes the step of indicating at least one of the hub number and the number of the sensor generating the alarm event at the controller.

3. The method of claim 1, wherein the controller includes a display unit and the step of indicating at least one of the sensor and hub numbers includes the step of displaying at least one of the sensor and hub numbers on the display unit at the controller.

4. The method of claim 1, wherein the step of storing the location of the sensor or hub includes the step of using a microprocessor to store the location.

5. The method of claim 4, wherein the microprocessor is located in the controller.

6. The method of claim 1, further comprising the steps of:

arming a main alarm to trigger an alarm signal when an alarm event is detected;

triggering the alarm signal when an initial alarm event is detected;

disarming the main alarm to deactivate the alarm signal;

re-arming the main alarm to trigger the alarm signal when a subsequent alarm event is detected while continuing to store the location of the sensor or hub generating the initial alarm event.

7. The method of claim 6, wherein the steps of disarming and re-arming are performed at the controller.

8. A method for operating a merchandise security system wherein a plurality of sensors are attached to a plurality of objects to be secured, a set of sensors within the plurality of sensors being connected to a corresponding hub, each hub being connected to a security system controller, each sensor or hub generating an alarm event when separated from the controller or object to be secured, the method comprising the steps of:

activating the controller to sense alarm events;

arming a main alarm to trigger an alarm signal when an alarm event is detected;

generating an alarm event when at least one sensor or hub is separated from the controller or object to be secured;

storing a location of a sensor or hub generating an initial alarm event;

triggering the alarm signal when the initial alarm event is detected;

disarming the main alarm to deactivate the alarm signal;

re-arming the main alarm to trigger the alarm signal when a subsequent alarm event is detected while continuing to store the location of the sensor or hub generating the initial alarm event.

9. The method of claim 8, wherein the steps of disarming and re-arming are performed at the controller.

10. The method of claim 8, wherein the controller stores the location of the sensor or hub generating the alarm event.

11. The method of claim 8, wherein the subsequent alarm event is generated by the sensor or hub that generated the initial alarm event.

12. The method of claim 8, wherein the subsequent alarm event is generated by a sensor or hub other than the sensor or hub that generated the initial alarm event.

13. A method for operating a merchandise security system wherein a plurality of sensors are attached to a plurality of objects to be secured, said sensors being connected to a security system controller, each sensor generating an alarm event when separated from the controller or object to be secured, the method comprising the steps of:

activating the controller to sense alarm events;

generating an alarm event when at least one sensor is separated from the controller or object to be secured; and

storing an identifier of a sensor generating an alarm event using a microprocessor.

14. The method of claim 13, further comprising the step of immediately after storing the identifier of the sensor generating an initial alarm event, maintaining the controller in a condition to sense subsequent alarm events while continuing to store the location of the sensor generating the initial alarm event.

15. The method of claim 13, further comprising the step of:

displaying the identifier of the sensor generating the alarm event at the controller.

16. The method of claim 13, wherein the microprocessor is located within the controller.

17. The method of claim 13, wherein each of said sensors includes an indication signal indicating that the sensor is capable of generating an alarm event if separated from the controller or object to be secured;

the indication signals on all of the sensors except for the sensor generating the alarm event being deactivated automatically by the controller upon the generation of the alarm event.

18. A method for operating a merchandise security system wherein a plurality of sensors are attached to a plurality of objects to be secured, the sensors being connected to a security system controller, each sensor generating an alarm event when separated from the controller or object to be secured, the method comprising the steps of:

activating the controller to sense alarm events;

arming a main alarm to trigger an alarm signal when an alarm event is detected;

generating an alarm event when at least one sensor is separated from the controller or object to be secured;

storing a location of the sensor generating the alarm event;

disarming the main alarm while continuing to store the location of the sensor generating the alarm event; and

retriggering the main alarm if a condition causing the alarm event is not corrected and a predetermined period of time has elapsed.

19. A method for operating a merchandise security system wherein a plurality of sensors are attached to a plurality of objects to be secured, and sensors being connected to a security system controller, each sensor generating an alarm event when separated from the controller or object to be secured, the method comprising the steps of:

activating the controller to sense alarm events;

arming a main alarm to trigger an alarm signal when an alarm event is detected;

generating an alarm event when a sensor is separated from the controller or object to be secured;

storing an identifier of a sensor generating an initial alarm event;

triggering the alarm signal when the initial alarm event is detected;

disarming the main alarm to deactivate the alarm signal; and

re-arming the main alarm to trigger the alarm signal when a subsequent alarm event is detected while continuing to store the identifier of the sensor generating the initial alarm event.

20. The method of claim 19, further including:

displaying the identifier of the sensor generating the initial alarm event;

correcting a condition causing the initial alarm event; and

displaying an identifier of a sensor generating the subsequent alarm event in place of the identifier of the sensor generating the initial alarm event.

21. The method of claim 19, wherein each of the sensors includes an indication signal indicating that the sensor is capable of generating an alarm event;

the indication signals on all of the sensors except for the sensor generating the initial alarm event being deactivated automatically by the controller upon the generation of the initial alarm event.

22. The method of claim 19, wherein said arming and disarming steps are performed by entering a code at said controller.

23. The method of claim 22, further including:

changing said code by accessing a reset button mounted within said controller by disassembling said controller;

depressing said reset button; and

entering a sequence of characters on a keypad of said controller.

24. A method for operating a merchandise security system wherein a plurality of sensors are attached to a plurality of objects to be secured, the sensors being connected to a security system controller, each sensor generating an alarm event when separated from the controller or object to be secured, the method comprising the steps of:

configuring the security system to determine a current system configuration by storing a current number of sensors attached to the controller;

activating the controller to sense alarm events and changes within the current system configuration;

automatically reconfiguring the current system configuration to an updated system configuration whenever additional sensors are connected to the controller; and

continuing to sense alarm events and changes within the updated system configuration.

25. The method of claim 24, wherein the controller has a plurality of sensor inputs, the controller configuring the system to recognize open sensor inputs when the current number of sensors attached to the controller is less than the plurality of sensor inputs.

26. A method for operating a merchandise security system wherein a plurality of sensors are attached to a plurality of objects to be secured, the sensors being connected to a security system controller, each sensor generating an alarm event when separated from the controller or object to be secured, the method comprising the steps of:

configuring the security system to determine a current system configuration by storing a current number of sensors attached to the controller;

activating the controller to sense alarm events and changes within the current system configuration;

arming a main alarm to trigger an alarm signal when an alarm event is detected;

storing a location of a sensor generating an alarm event;

determining whether there are any stored alarm events;

disarming the main alarm when there are no stored alarm events;

changing the location of sensors attached to the controller or reducing the number of sensors;

reconfiguring the system to determine an updated system configuration by storing the changed number of sensors and the location of each sensor; and

re-arming the main alarm to trigger the alarm signal when alarm events are detected within the updated system configuration.

27. The method of claim 26, further comprising the step of prohibiting the step of disarming the main alarm when there are stored alarm events.

28. A method for operating a merchandise security system wherein a plurality of sensors are attached to a plurality of objects to be secured, the sensors within the plurality of sensors being connected to a security system controller, each sensor generating an alarm event when separated from the controller or object to be secured, the method comprising the steps of:

activating the controller to sense alarm events;

arming a main alarm to trigger an alarm signal when an alarm event is detected;

generating an alarm event when at least one sensor is separated from the controller or object to be protected, thereby activating the main alarm;

storing a location of the sensor generating the alarm event;

activating an indication signal on each of the plurality of sensors after the controller is activated; and

deactivating the indication signals on all sensors except for the indication signal on the sensor that generated the alarm event.

29. A method for operating a merchandise security system wherein a plurality of sensors are attached to a plurality of objects to be secured, the sensors being connected to a security system controller, each sensor generating an alarm event when separated from the controller or object to be secured, the method comprising the steps of:

activating the controller to sense alarm events; and

indicating that a sensor is capable of generating an alarm event by activating an indication signal on the sensor, the indication signal being a sequence of signals, the number of signals within the sequence indicating a location of the sensor.

30. The method of claim 29, wherein the indication signal is a visual signal, and the sequence of signals is a flashing sequence of the indicator signal.

31. A merchandise security system comprising:

a controller for sensing alarm events;

one or more hubs connected to the controller;

a plurality of sensors capable of attachment to a plurality of objects to be secured, a set of sensors within the plurality of sensors being attached to a corresponding hub, each sensor or hub generating an alarm event when separated from the controller or object to be secured;

wherein the controller stores the location of the sensor or hub generating the alarm event and displays the location of the sensor or hub generating the alarm event at the controller.

32. The system of claim 31, wherein the sensors connected to a hub are each assigned a separate sensor number and the hubs connected to the controller are each assigned a separate hub number, and wherein the controller indicates at least one of the hub number and the number of the sensor generating the alarm event at the controller.

33. The system of claim 32, wherein the controller includes a display unit which displays at least one of the sensor and hub numbers on the display unit at the controller.

34. The system of claim 31, wherein the controller includes a microprocessor to store the location.

35. The system of claim 34, wherein the microprocessor is located in the controller.

36. The system of claim 31, wherein the controller arms a main alarm to trigger an alarm signal when an alarm event is detected; triggers the alarm signal when an initial alarm event is detected; allows an operator to disarm the main

alarm to deactivate the alarm signal; and allows an operator to re-arm the main alarm to trigger the alarm signal when a subsequent alarm event is detected while continuing to store the location of the sensor or hub generating the initial alarm event.

37. The system of claim **36**, wherein the disarming and re-arming are performed by the operator at the controller.

38. A merchandise security system comprising:

a controller for sensing alarm events;

one or more hubs connected to the controller;

a plurality of sensors capable of attachment to a plurality of objects to be secured, a set of sensors within the plurality of sensors being attached to a corresponding hub, each sensor or hub generating an alarm event when separated from the controller or object to be secured;

wherein the controller arms a main alarm to trigger an alarm signal when an alarm event is detected; stores a location of a sensor or hub generating an initial alarm event; triggers the alarm signal when the initial alarm event is detected; allows an operator to disarm the main alarm to deactivate the alarm signal; and allows an operator to re-arm the main alarm to trigger the alarm signal when a subsequent alarm event is detected while continuing to store the location of the sensor or hub generating the initial alarm event.

39. The system of claim **38**, wherein the disarming and re-arming are performed by the operator at the controller.

40. The system of claim **38**, wherein the controller stores the location of the sensor or hub generating the alarm event.

41. The system of claim **38**, wherein the subsequent alarm event is generated by the sensor or hub that generated the initial alarm event.

42. The system of claim **38**, wherein the subsequent alarm event is generated by a sensor or hub other than the sensor or hub that generated the initial alarm event.

43. A merchandise security system comprising:

a controller for sensing alarm events;

a plurality of sensors capable of attachment to the controller and a plurality of objects to be secured, each sensor generating an alarm event when separated from the controller or object to be secured;

wherein the controller includes a microprocessor for storing a location of an initial sensor generating an alarm event and for continuing to sense subsequent alarm events while continuing to store the location of the initial sensor.

44. A merchandise security system comprising:

a controller for sensing alarm events;

a plurality of sensors capable of attachment to the controller and a plurality of objects to be secured, each sensor generating an alarm event when separated from the controller or object to be secured;

wherein the controller triggers a main alarm upon detecting an alarm event, stores the location of the sensor generating the alarm event, and re-triggers the main alarm if a condition causing the alarm event is not corrected and a predetermined period of time has elapsed.

45. A merchandise security system comprising:

a controller for sensing alarm events;

a plurality of sensors attached to a plurality of objects to be secured, and connected to the security system controller, each sensor generating an alarm event when separated from the controller or object to be secured;

wherein the controller arms a main alarm to trigger an alarm signal when an alarm event is detected; stores an identifier of a sensor generating an initial alarm event; triggers the alarm signal when the initial alarm event is detected; allows an operator to disarm the main alarm to deactivate the alarm signal; and allows the operator to re-arm the main alarm to trigger the alarm signal when a subsequent alarm event is detected while continuing to store the identifier of the sensor generating the initial alarm event.

46. A merchandise security system comprising:

a controller for sensing alarm events;

a plurality of sensors capable of attachment to the controller and a plurality of objects to be secured, each sensor generating an alarm event when separated from the controller or object to be secured;

wherein the controller configures the security system to determine a current system configuration by storing a current number of sensors and a location of each sensor; the controller sensing alarm events and changes within the current system configuration; and the controller automatically reconfiguring the current system configuration to an updated system configuration whenever additional sensors are added, the controller continuing to sense alarm events and changes within the updated system configuration.

47. A merchandise security system comprising:

a controller for sensing alarm events;

a plurality of sensors capable of attachment to the controller and a plurality of objects to be secured, each sensor generating an alarm event when separated from the controller or object to be secured;

wherein the controller: configures the security system to determine a current system configuration by storing a current number of sensors and a location of each sensor; arms a main alarm to trigger an alarm signal when an alarm event is detected; stores a location of a sensor generating an alarm event; and allows disarming of the main alarm and reconfiguring of the current system configuration to an updated system configuration when there are no stored alarm events and when the location of a sensor is changed or the number of sensors has been reduced from the current system configuration.

48. A merchandise security system comprising:

a controller for sensing alarm events;

a plurality of sensors capable of attachment to the controller and a plurality of objects to be secured, each sensor generating an alarm event when separated from the controller or object to be secured;

wherein the controller stores a location of the sensor generating an alarm event; and an alarm signal is activated when an alarm event is detected;

wherein each sensor includes an indication signal indicating that the sensor is capable of generating an alarm event, the indication signal on all sensors being deactivated when the alarm signal is activated, except for the sensor that generated the alarm event.

* * * * *

UNITED STATES PATENT AND TRADEMARK OFFICE

CERTIFICATE OF CORRECTION

PATENT NO. : 6,278,365 B1
DATED : August 21, 2001
INVENTOR(S) : Kane et al.

It is certified that error appears in the above-identified patent and that said Letters Patent is hereby corrected as shown below:

Column 17,
Line 1, please change “claim 1” to -- claim 2 --.

Signed and Sealed this

Eighth Day of October, 2002

Attest:

Attesting Officer

JAMES E. ROGAN
Director of the United States Patent and Trademark Office