CR338 SERIES



ADAPTABLE. PROTECTION.

The CR338 Series is where adaptable security meets a sleek modern design! This series is cost-effective while still offering the flexibility to meet the unique customer experiences of your store. Equipped with a cut-resistant cable and ready for inductive charging, it is prepared for the future of security technology.

Customer Care | 1-877-477-4874
International | +1-813-855-9639
Rev 12/11/25 | ©2025 Vanguard Protex Global

vanguardprotexglobal.com

POWERED BY INNOVATION.
SECURED BY EXPERIENCE.

Product Flexibility

Not only can the CR338 Series rotate the device 360°, but its enhanced user-friendly display offers customers a chance to interact with the merchandise as they would in their daily life.

The CR338 Series is developed for adaptability to future technology, making it a complete package for any store.

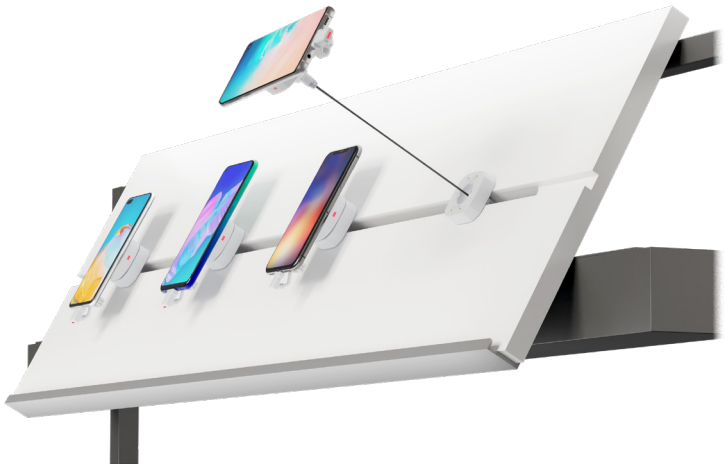



Quick Release

In a matter of seconds, store associates can quickly remerchandise a position with a new product. They can also untether the merchandise for a hands-on customer experience.

The quick disconnect makes nighttime storage super convenient!



IR Keyfob

VPG's IR Keyfob is the most cost-effective key available in the industry. Stores can arm and disarm the CR338 Series within one foot of the alarm unit to give store associates touchless control.



Phone and Tablet Compatible

Display your smartphones and tablets right next to each other with the same minimalistic display. They can get fully secured with the same pedestal and sensor.

Cut-Resistant Cable

The cut-resistant cord reel gives customers the flexibility to interact with the secured mobile device.

The cord reel contains metal fibers which make for a more durable cable.



Optional Features



Wireless Charging Sensor

For the latest innovative phones and tablets that hit the market, the CR338 Series features an option to be equipped with Wireless Charging.

No power couplers are needed! It charges the device every time it is resting on the pedestal.



Bracket Compatibility

2-Arm and 4-Arm brackets complement the sensor and serve as a deterrent to theft.

The brackets will not scratch the device and protect it from being damaged.

Color Options

CR338-Under The Counter (UTC)



White

Black

CR338-Above The Counter (ATC)



White

Black

Bracket Options

2-Arm Bracket



4-Arm Bracket

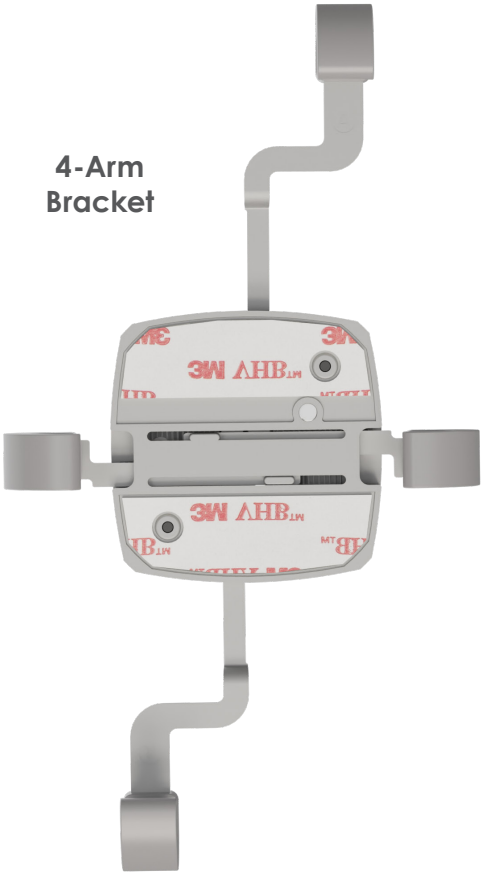

Note: Compatible with standard phone and tablet sizes.

CR338-Above The Counter (ATC)

Pedestal

Front



Side



Sensor

Top

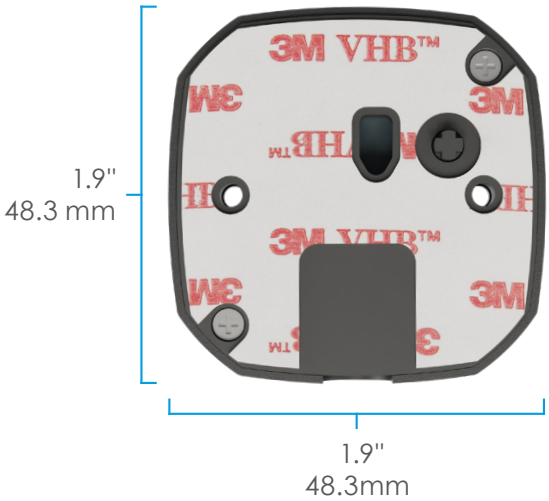

Side



POWERED BY INNOVATION.
SECURED BY EXPERIENCE.

CR338-Above The Counter (ATC)



CR338 Mounting Kit Options

All-Thread Mounting Kit

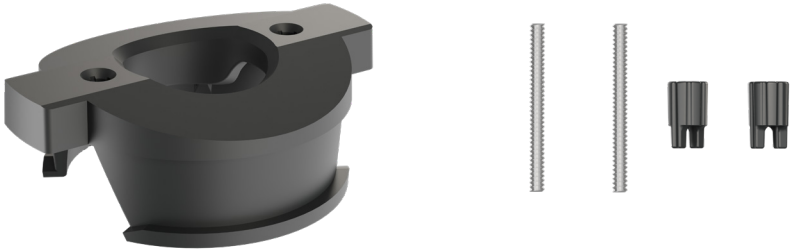

Single Hole Mounting Kit



POWERED BY INNOVATION.
SECURED BY EXPERIENCE.

CR338-Under The Counter (UTC)

Sensor

Top

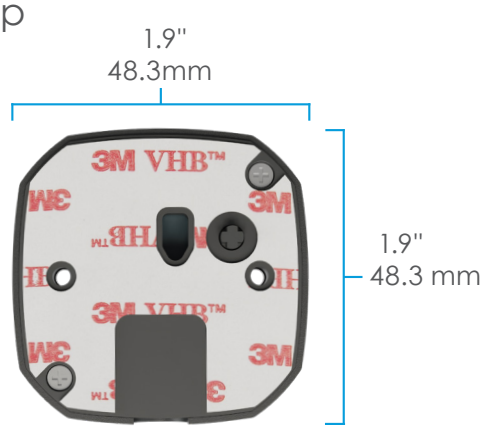

Side



Low-Profile Pedestal

Front



Top

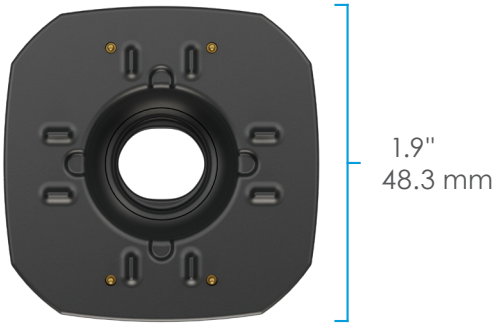

Cord Reel - UCM Assembly and Mounting Bracket

Front

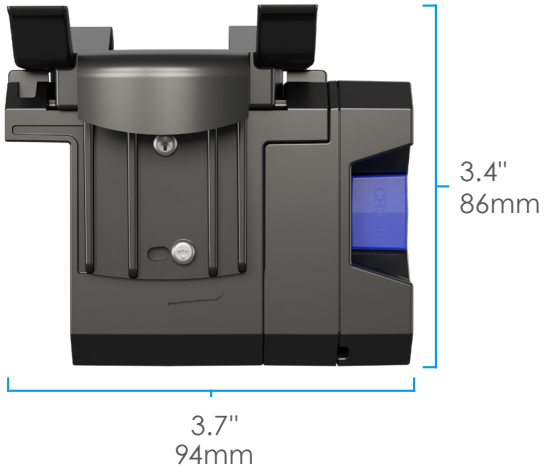

Side

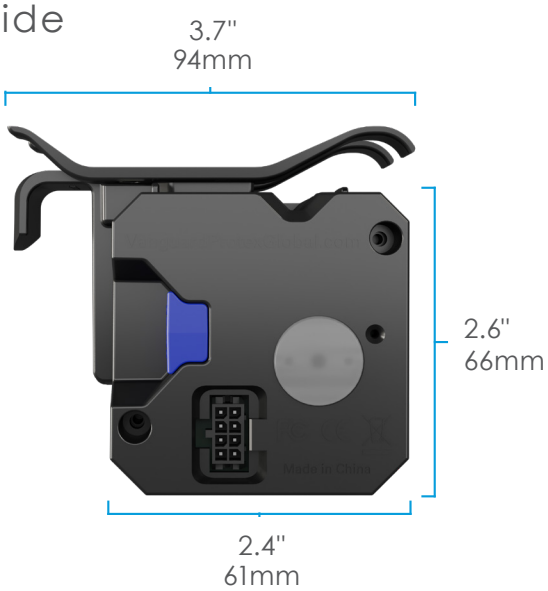

POWERED BY INNOVATION.
SECURED BY EXPERIENCE.
VPG

CR338-Under The Counter (UTC)

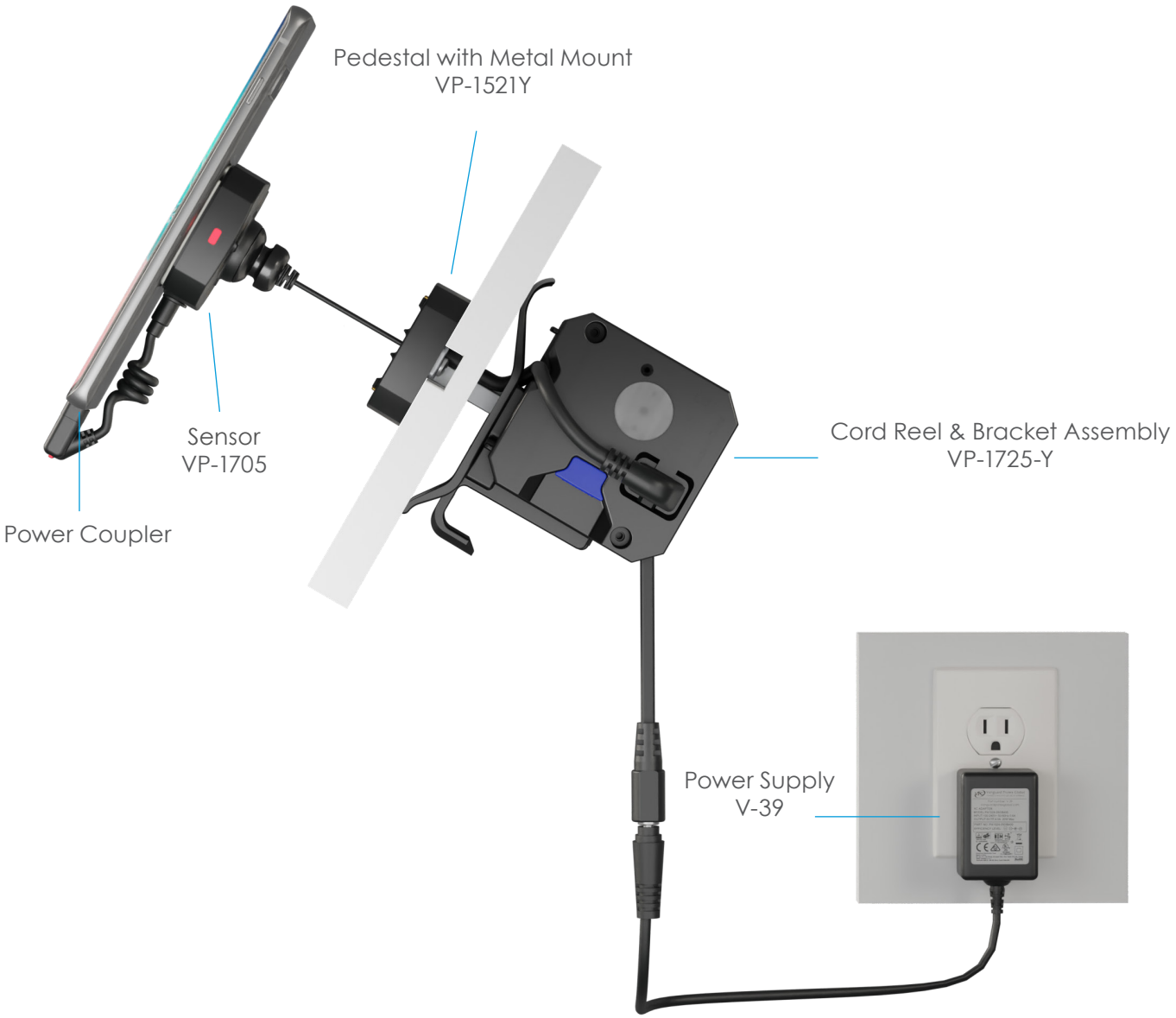

CR338-UTC Metal Pedestal Mount and Spring Mounting Bracket



Pedestal Mount



Spring Mounting Bracket

Part Number	Description
CR338-ATC Finished Kits: (Domestic) * Kits contain Sensor, Alarm Unit, and Power Supply	
K-CR338-02#	CR338 Kit - No Coupler
CR338-ATC Finished Kits: (International) * Kits contain Sensor, Alarm Unit	
K-CR338-02#-I	CR338 Kit - No Coupler
K-CR338HW-01#-I	CR338 Kit - Hardwired Micro USB
K-CR338HW-07#-I	CR338 Kit - Hardwired Lightning
K-CR338HW-11#-I	CR338 Kit - Hardwired USB-C
CR338-ATC Mounting Kits	
K-1140	Hole Mount Kit
K-1106	1.5 inch Threaded Mount Kit
K-1107	3 inch Threaded Mount Kit
CR338-ATC Pedestal	
VP-1751#	CR338 Pedestal
CR338-UTC Finished Kits: (Domestic) Kits contain Pedestal, Sensor, Power Coupler, Alarm Unit, and Power Supply	
K-CR338UC-02#	CR338-UTC Kit No Cplr
CR388-UTC Finished Kits: (International) Kits contain Pedestal, Sensor, Alarm Unit, Power Coupler	
K-CR338UC-02#-I	CR338-UTC Kit No Cplr
K-CR338UCHW01#I	CR338-UTC Kit Hardwired Micro USB
K-CR338UCHW07#I	CR338-UTC Kit Hardwired Lightning
K-CR338UCHW11 #I	CR338-UTC Kit Hardwired USB-C
CR338-UTC Pedestal	
VP-1521Y#	CR338-UTC Pedestal Mtl Mnt
CR338-UTC Under-Counter Module (UCM)	
VP-1750-Y	CR338-UTC UCM & Bkt Assy
VP-1540#	CR338-UTC Boot

Part Number	Description
Sensors	
VP-1707#	CR338 Sensor (No power coupler)
Hardwired Sensors	
VP-1705#	CR338 Sensor - USB-C Power
VP-1706#	CR338 Sensor - Lightning Power
VP-1723#	CR338 Sensor - Micro USB Power
Power Coupler	
P21001	CR338 Cplr Micro USB Blk
P21002	CR338 Cplr Micro USB Wht
P21005	CR338 Cplr Type-C PAS Blk
P21006	CR338 Cplr Type-C PAS Wht
P21012	CR338 Cplr Apple Lightning Sherlock Wht
P21015	CR338 Cplr Apple Lightning Sherlock Blk
Brackets (Only Use with Hardwired Sensors)	
K-CELLBKT-05S	Cell Bracket With Two Arms Slv
K-CELLBKT-06S	Additional Two Bracket Arms Slv
K-TABBKT-05S	Tablet Bracket
VP-1673	Lockdown Collar
Replacement Parts	
AD-238-8	CR338 Sensor Adhesive (8pk)
AD-240-5	CR338 Bracket Sensor Adhesive (5pk)
AD-298-8	CR338 Pedestal Adhesive (8pk)
KF-1111	SmartTime™ Keyfob
VP-1446	Magnet Tool
VP-1477	CR338 Removal Tool
V-39	Power Supply

- Color variation placeholder. Substitute in W for White.