TITAN® L2QD



TOUGH SECURITY
MEETS CUSTOMER EXPERIENCE

Never choose between security and customer experience ever again!
VPG's TITAN® L2QD combines the highest protection in the industry with
a quick-release untethered engagement for user satisfaction.

Customer Care | 1-877-477-4874
International | +1-813-855-9639
Rev 03/07/25 | ©2023 Vanguard Protex Global

vanguardprotexglobal.com

POWERED BY INNOVATION.
SECURED BY EXPERIENCE.

TITAN® Slim Arm Brackets

VPG's new Slim Arm Brackets are more discreet, allowing the device's features to speak for themselves. The TITAN® Slim Arm Brackets are also adjustable to secure a wide variety of devices.



Cut-Resistant Cable

The cut-resistant cable is made of high-grade aircraft cable. It's secured to the sensor and is anchored by an adjustable cable stop underneath the counter.



Vertical & Angled Displays

Whatever display your store holds, the TITAN® L2QD is adaptable to various fixtures and accommodates most retail environments. Plus, the pedestals are powered to keep the devices charged when rested.

360° Rotation

Customers may rotate the device 360° on the display pedestal to experience full and wide screen content. Power coupler rotates with the device providing clean cable management.



QUICK DISCONNECT

Effortlessly remove device in seconds.

TURN IT



DISCONNECT IT



SECURE IT



RECONNECT WITHOUT TOOLS

Color Options



Black



White

Pedestal Options



Vertical Display



Angled Display

Bracket Options

Phone



Tablet

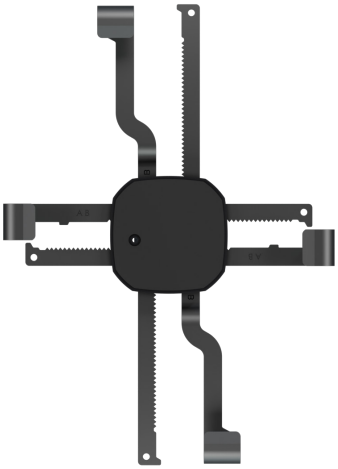

Front



Back



Side



Bottom



Side



Front

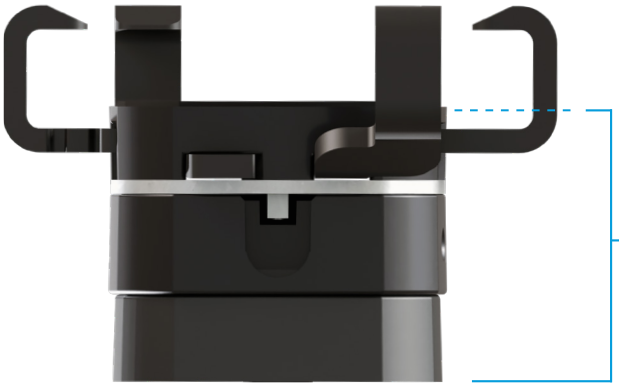

Top

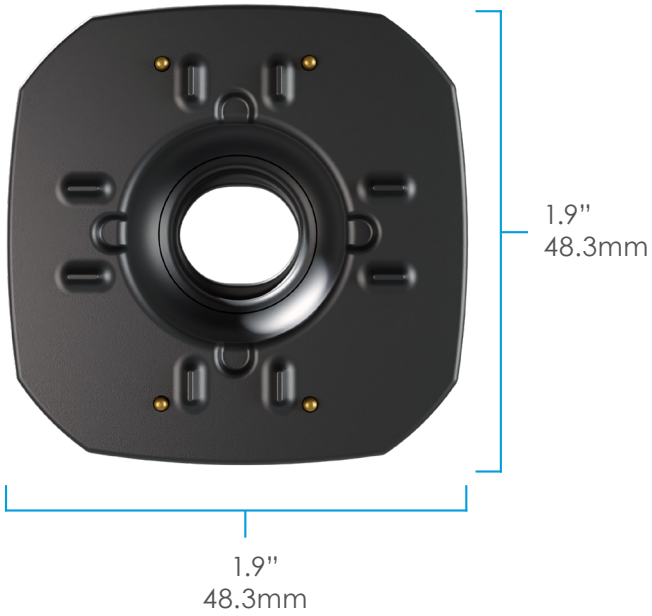

Bottom

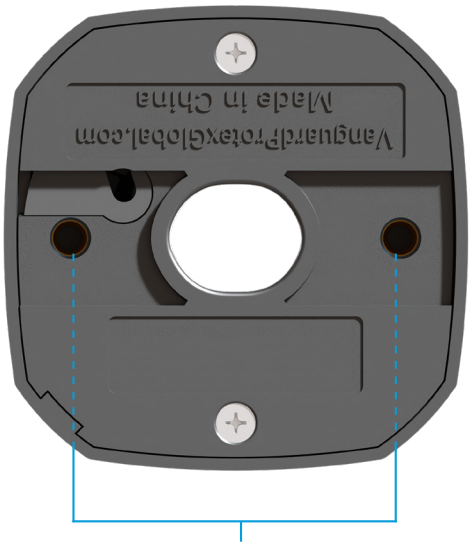

Center of Mounting Holes

Phone Brackets

Front

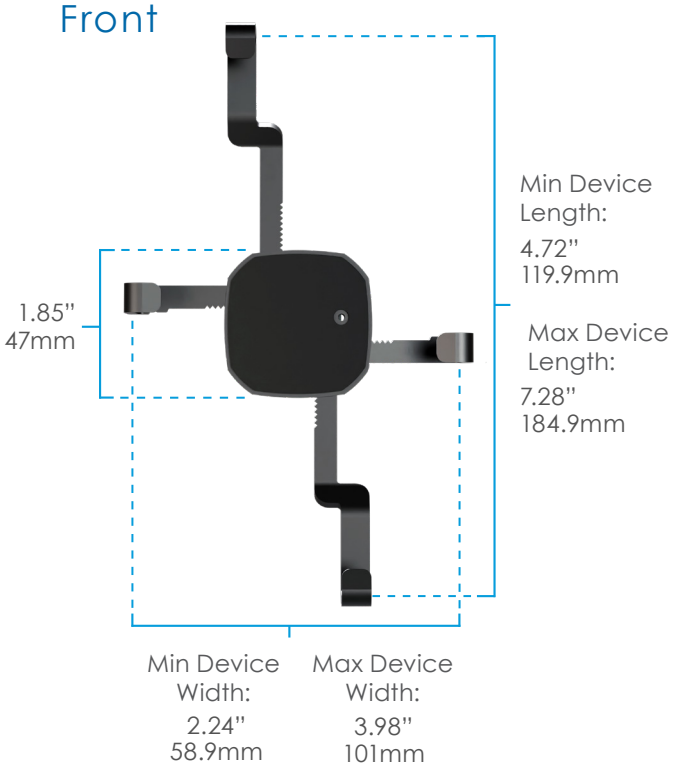

Side

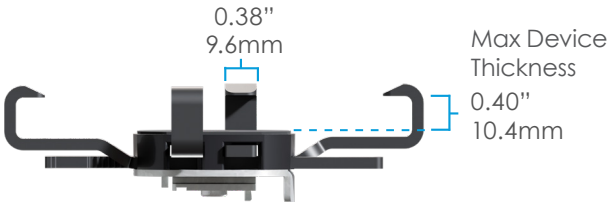

Tablet Brackets

Front

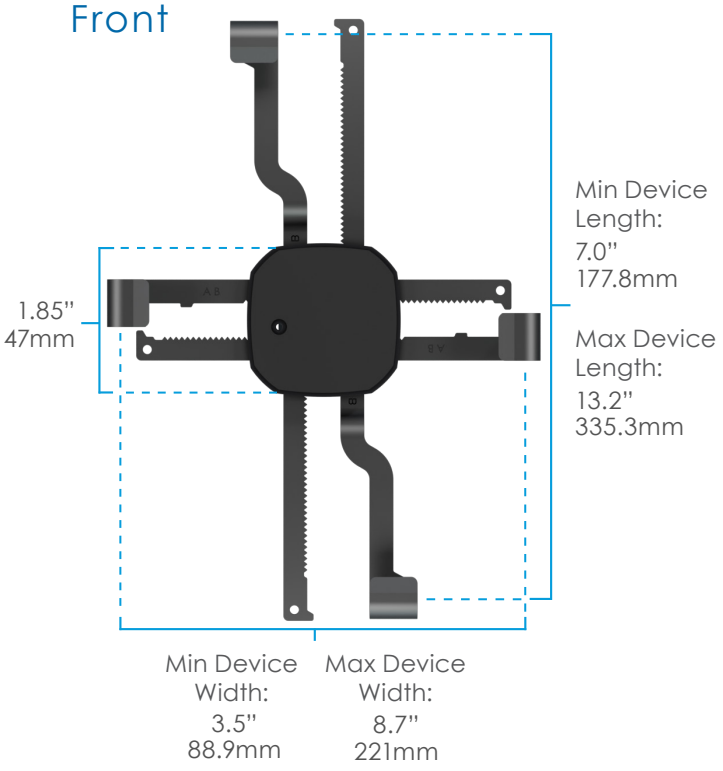

Side

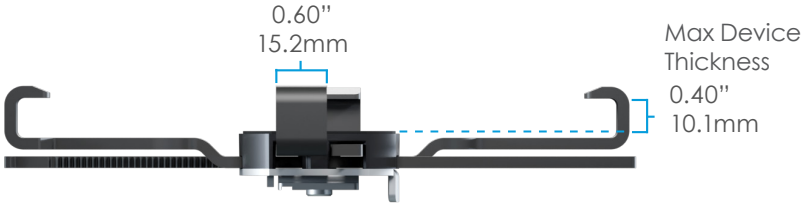

QD Sensor with Steel Cable

Top

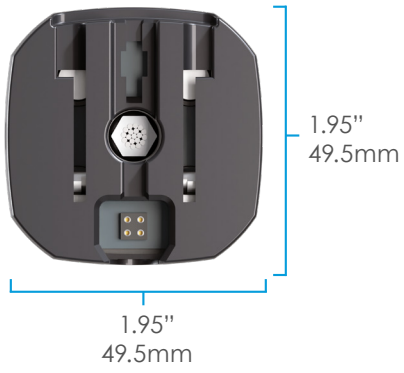

Side

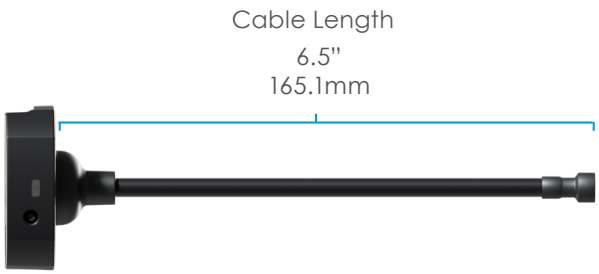



TITAN® L2QD Mounting Kit

K-1120 (Fixtures 3/4" Thickness)

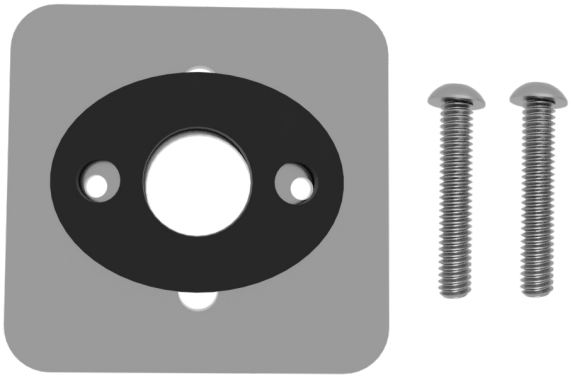

Note:
Additional fixture depths can be accommodated upon request.

TITAN® L2QD Cable Stop Lock



TITAN® L2QD | PARTS LIST

Part Number	Description
Finished Kits: Kit contains pedestal, bracket, mounting plate, threaded screws, & thumb nuts	
K-TTNL2QD-02C	TITAN® L2QD Kit (No Power Coupler)
K-TTNL2QDA-02CI	TITAN® L2QD Kit (No Power Coupler or Power Supply)
K-TTNL2QDWM-02C	TITAN®-L2QD Medium Kit White No Coupler - Vertical
K-TTNL2QDWL-02C	TITAN®-L2QD Large Kit White No Coupler - Vertical
K-TTNL2QDW-02C	TITAN®-L2QD Small Kit White No Coupler - Vertical
K-TTNL2QDM-02C	TITAN®-L2QD Medium Kit Black No Coupler - Vertical
K-TTNL2QDL-02C	TITAN®-L2QD Large Kit Black No Coupler - Vertical
K-TTNL2QDAWM 02C	TITAN®-L2QD Angled Medium Kit White No Coupler
K-TTNL2QDDAWL 02C	TITAN®-L2QD Angled Large Kit White No Coupler
K-TTNL2QDAW-02C	TITAN®-L2QD Angled Small Kit White No Coupler
K-TTNL2QDAM-02C	TITAN®-L2QD Angled Medium Kit Black No Coupler
K-TTNL2QDAL-02C	TITAN®-L2QD Angled Large Kit Black No Coupler
K-TTNL2QDA-02CI	TITAN®-L2QD Angled Small Kit Black No Coupler
K-TTNL2QDA-02C	TITAN®-L2QD Angled Small Kit Black No Coupler
K-TTNL2QD-02WV	TITAN®-L2QD Small Kit White No Coupler - Vertical
K-TTNL2QD-02CI	TITAN®-L2QD Small Kit Black No Coupler - Vertical
K-TTNL2QD-02C	TITAN®-L2QD Small Kit Black No Coupler - Vertical
KTTNL2QDDAM W02CI	TITAN®-L2QD Angled Small Kit White No Coupler

Part Number	Description
Pedestal	
VP-1594#	TITAN® Pedestal (Angled)
VP-1586#	TITAN® Pedestal (Vertical)
Sensor	
VP-1710-3	TITAN® L2QD Sensor
Security Brackets	
VP-1712#	TITAN® Slim Arm Phone Bracket
VP-1843#	TITAN®-L2QD Tablet Bracket
VP-1821	TITAN®-L2QD QI Cell Bkt Blk
Power Supply/Couplers	
V-39	Power Supply
P21001	Micro-USB Black Power Coupler
P21002	Micro-USB White Power Coupler
P21005	Type-C Black Power Coupler
P21006	Type-C White Power Coupler
P21012	Apple Lightning White Power Coupler
P21015	Apple Lightning Black Power Couple
Mounting	
VP-1644	Cable Stop (Pin-in-Hex)
K-1120	TITAN® L2QD Under Counter Screw Mounting Kit (3/4" Fixture)
Tools and Accessories	
V-T900	Security Driver - Bracket Lock Tool
V-T30	Security Driver - Quick Disconnect Tool
V-T41	Security Driver - Cable Stop Tool
V-T99	Philips Driver - Mounting Screws Tool
K-1143	TITAN®-L2QD Sensor/Bracket Screw 20
K-1144	TITAN® L2QD Bracket Adapter Kit

- Color variation placeholder. Substitute in W for White OR remove for Black
*Products not shown to scale. Subject to change without notice.