TITAN L2

High Theft Security for Phones & Tablets



Fully protect your store

Secure and protect high-end phones and tablets with a stand-alone security solution designed around the customer experience. The TITAN L2 features an integrated charging system that provides power to the secured device. The security sensor is attached to an adjustable cable stop underneath the counter. The TITAN L2 is compatible with most retail fixtures and comes in two pedestal variations, vertical and angled. 4-Arm security rackets compliment the pedestal and serve as a deterrent to theft. The brackets are scratch resistant and come in various sizes. Installation is convenient and intuitive. Optional alarm available.

Copyright 2019 Vanguard Protex Global
Rev. 11.7.2019

VanguardProtexGlobal.com
Customer Care 1-877-477-4874 **International** +1-813-855-9639

Integrated Charging System

The TITAN L2 features an integrated charging system that provides power to the secured device through the security sensor and power coupler, providing optimal cable management.

Two red LED lights indicate the device is charging.

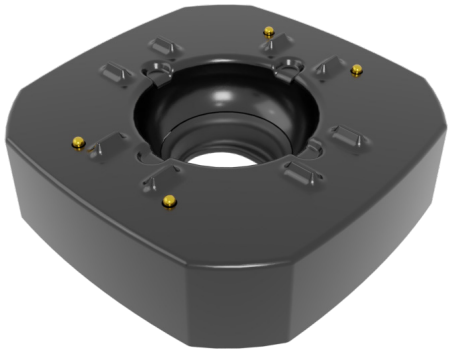



Metal Brackets

TITAN L2 brackets are made of high-grade metal alloy, custom designed specifically to deter and stop theft.

The security arms keep the device secure from all sides. The brackets are scratch resistant and will not damage the secured device.

Cut Resistant Cable

The cut resistant cable is made of high-grade aircraft cable. It's secured to the sensor and is anchored by an adjustable cable stop underneath the counter.





Vertical & Angled Mounting

The vertical and angled pedestal options accommodate most retail environments.

Whether your store has a horizontal, vertical, or angled display, the TITAN L2 is adaptable to a variety of fixtures.

360° Rotation

Customers may rotate the device 360° on the display pedestal to experience full screen HD videos and other widescreen content.

The power coupler rotates with the device providing clean cable management regardless of the viewing angle.

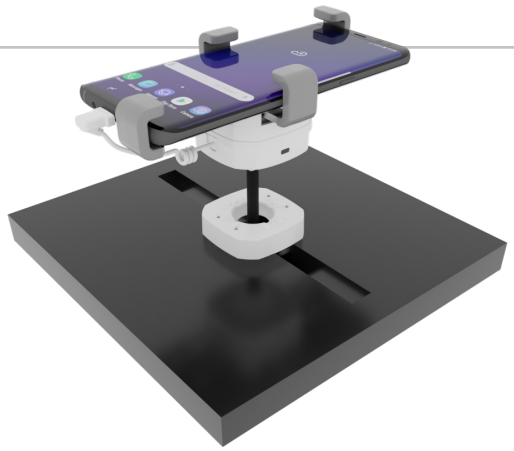

Copyright 2019 Vanguard Protex Global

Variations and Options

Colors



White



Black

Pedestals



Angled Display



Vertical Display

Brackets



Large Bracket



Medium Bracket



Small Bracket

Note: Compatible with all standard phone and tablet sizes

Copyright 2019 Vanguard Protex Global

Spec Sheet - Angled Pedestal

TITAN L2

Front



Back



Right

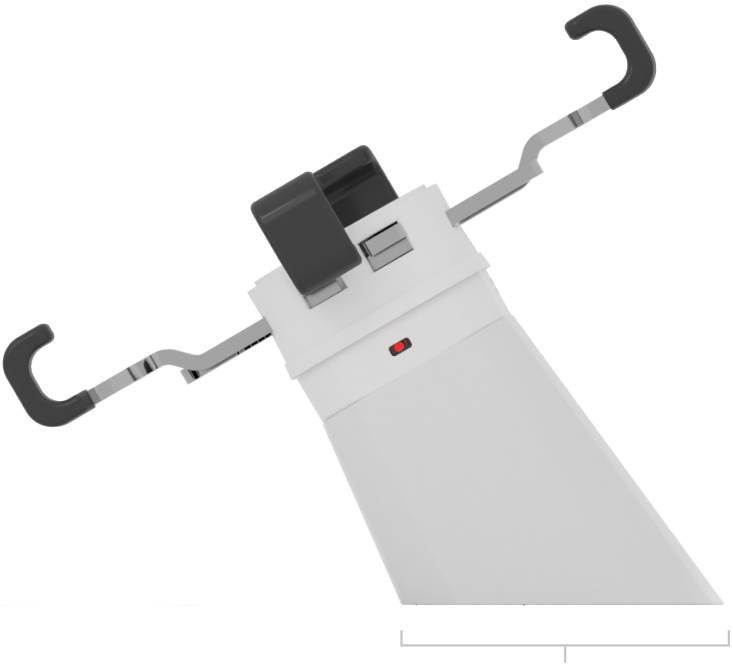

Bottom



Copyright 2019 Vanguard Protex Global
Rev. 11.7.2019

VanguardProtexGlobal.com
Customer Care 1-877-477-4874 **International** +1-813-855-9639

Spec Sheet - Vertical Pedestal

TITAN L2

Right



Front

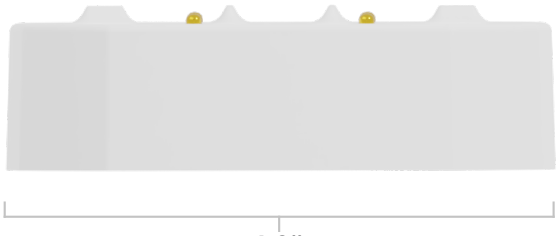

Top

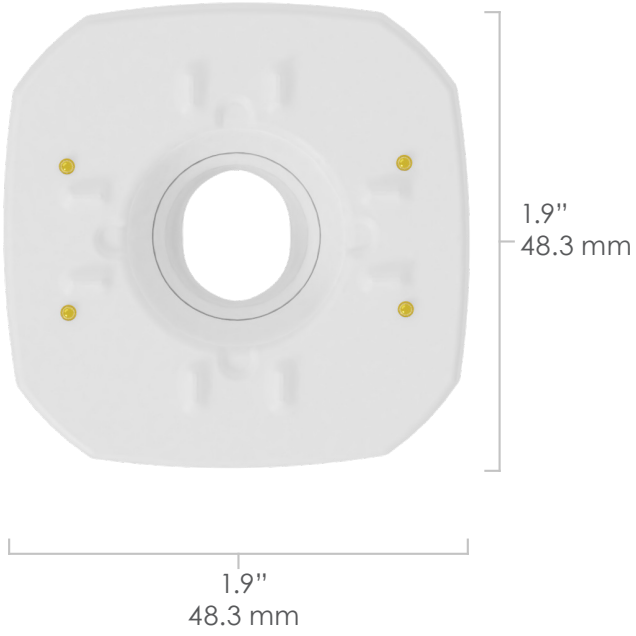

Bottom

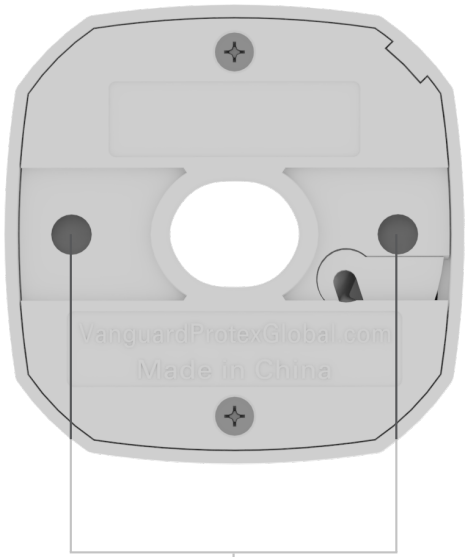

Center of Mounting Holes

Copyright 2019 Vanguard Protex Global
Rev. 11.7.2019

VanguardProtexGlobal.com
Customer Care 1-877-477-4874 **International** +1-813-855-9639

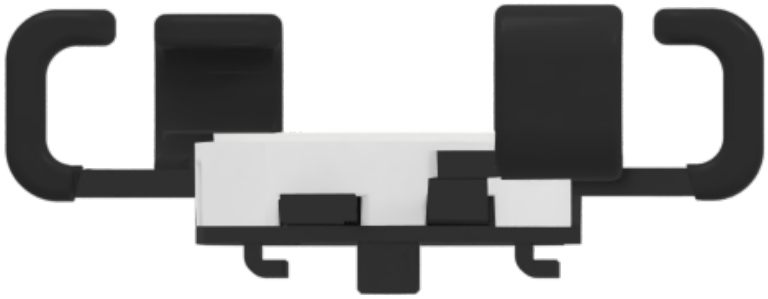

Small

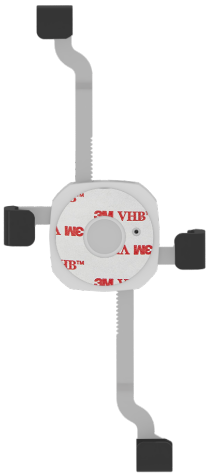

Min Length:
4.72”
120 mm

Max Length:
7.76”
197 mm

Min Width:
2.24”
57 mm

Max Width:
3.62”
92 mm

Maximum Device Thickness

Phone Thickness:
.45”
11.4 mm

Tablet Thickness:
.37”
9.4 mm

Medium

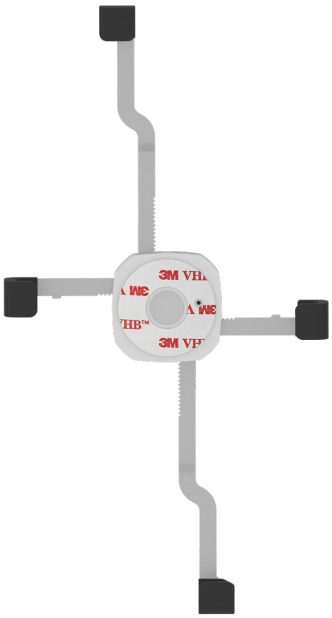

Min Length:
6.89”
175 mm

Max Length:
10.32”
262 mm

1.85”
47 mm*

Min Width:
3.15”
80 mm

Max Width:
5.67”
144 mm

Large

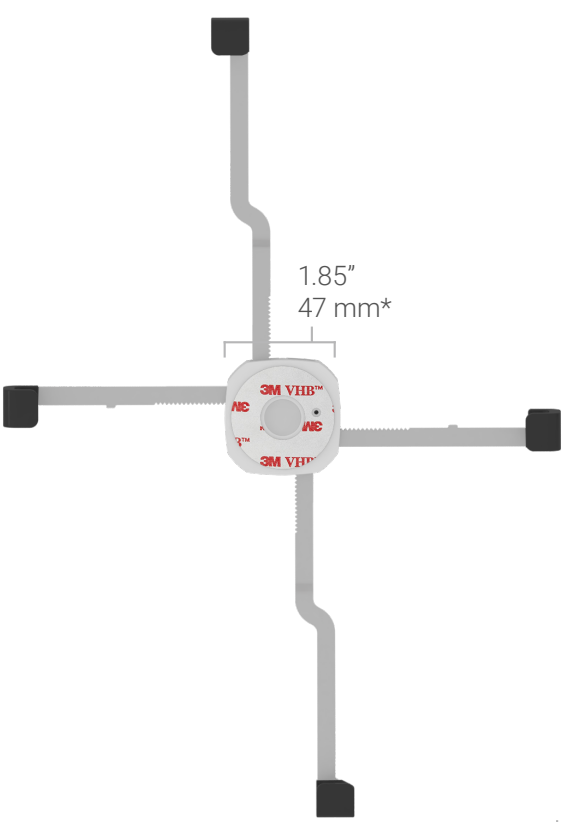

1.85”
47 mm*

Min Length:
9.45”
240 mm

Max Length:
12.87”
327 mm

Min Width:
4.92”
125 mm

Max Width:
9.21”
234 mm

*Bracket hub same size for all versions.

Copyright 2019 Vanguard Protex Global
Rev. 11.7.2019

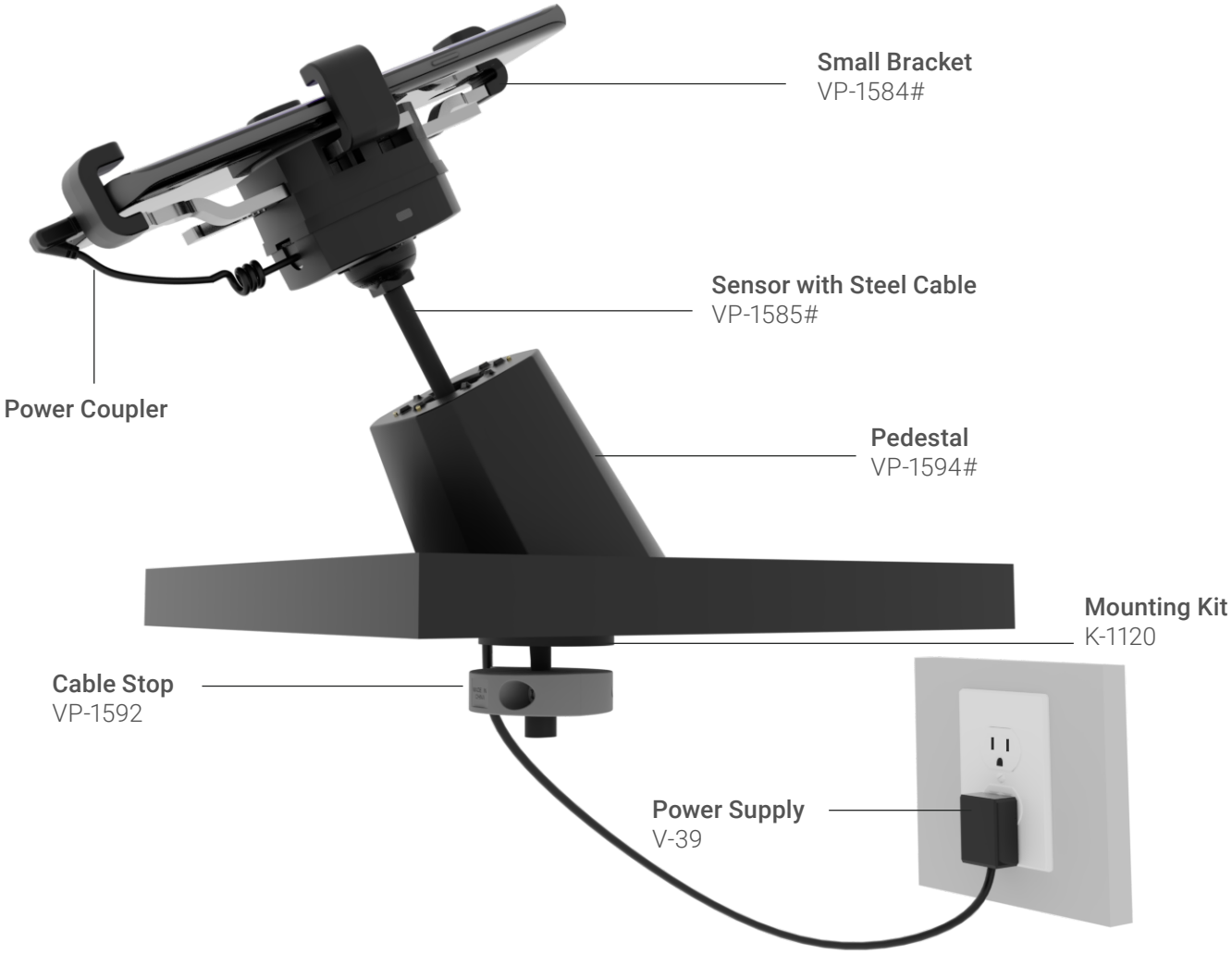

Titan L2 Mounting Kit

K-1120 (Fixtures 3/4” Thickness)

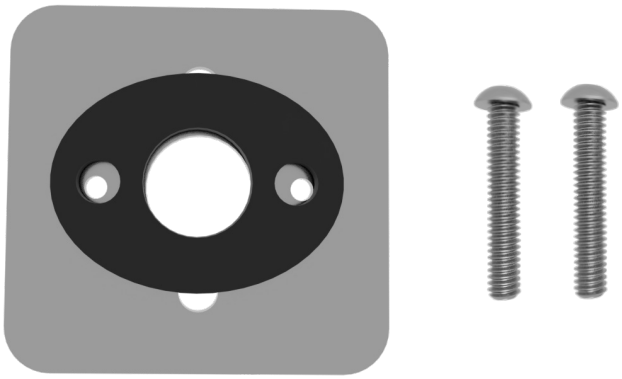

Note:
Additional fixture depths can be accommodated upon request.

Copyright 2019 Vanguard Protex Global

Parts List

Part Number	Description
Finished Kits	Kit includes pedestal, bracket, mounting plate, threaded screws, & thumb nuts.
PART NUMBER	MAS Description of part
K-TTNL2-02E#	Titan-L2 Vertical Small Bracket Kit - No Power Coupler
K-TTNL2M-02E#	Titan-L2 Vertical Medium Bracket Kit - No Power Coupler
K-TTNL2L-02E#	Titan-L2 Vertical Large Bracket Kit - No Power Coupler
K-TTNL2A-02-E#	Titan-L2 Angled Small Bracket Kit - No Power Coupler
K-TTNL2AM-02E#	Titan-L2 Angled Medium Bracket Kit - No Power Coupler
K-TTNL2AL-02E#	Titan-L2 Angled Large Bracket Kit - No Power Coupler
Pedestal	
VP-1594#	Titan Pedestal (Angled)
VP-1586#	Titan Pedestal (Vertical)
Sensor	
VP-1585#	Titan Pedestal (Vertical)
VP-1595#	Titan Pedestal (Angled)
Security Brackets	
VP-1584#	Titan L2 Small Bracket
VP-1587#	Titan L2 Medium Bracket
VP-1588#	Titan L2 Large Bracket
Power Supply/Couplers	
V-39	Power Supply (Plugs Into Pedestal)
P21001	Micro-USB Black Power Coupler
P21002	Micro-USB White Power Coupler
P21005	Type-C Black Power Coupler
P21006	Type-C White Power Coupler
P21010	Apple Lightning Power Coupler
P21012	Apple Lightning White Sherlock Power Coupler
P21015	Apple Lightning Black Sherlock Power Couple
Mounting	
VP-1592	Cable Stop (Pin-in-Hex)
K-1120	Titan L2 Under Counter Screw Mounting Kit (3/4" Fixture)
Tools and Accessories	
V-T900	Security Driver (1/8")
V-900-T	Security Allen Wrench (1/8")
V-T41	Security Driver (Cable Stop Tool - 5/32")

 # - Color variation placeholder. Substitute in W for White.

VanguardProtexGlobal.com

*Products not shown to scale. Subject to change without notice.

USA: 1.877.477.4874
International: 1.813.855.9639

Copyright 2019 Vanguard Protex Global