# TITAN® SERIES



# FULL.METAL.PROTECTION.

Secure and protect high-end phones, tablets, and wearables with a stand-alone security solution designed to offer an untethered customer experience. Each TITAN® model is made of hardened steel brackets to fully lockdown the merchandise.

Customer Care | 1-877-477-4874
International | +1-813-855-9639
Rev 03/10/25 | ©2021 Vanguard Protex Global

vanguardprotexglobal.com

POWERED BY INNOVATION.
SECURED BY EXPERIENCE.

## Slim Arm Bracket

TITAN® Slim Brackets are made of a high-grade metal with an all new low-profile design to showcase your high-end devices.

The TITAN® Slim Arm Bracket is adjustable to fit most phone sizes.



## TITAN® Watch

The TITAN® can also secure high-end watches with the interchangeable TITAN® Wearable Bracket.

These brackets are custom-fitted for a variety of watch faces and can alternate between our family of TITAN® products.



## TITAN® Keylock

TITAN® Keylock offers the same level of high security with interchangeable keys and lock cores for swift field changes and convenient nighttime storage.

The TITAN® Keylock is compatible with all TITAN® brackets and mounting hardware.



## QUICK DISCONNECT

Effortlessly remove device in seconds.



## RECONNECT WITHOUT TOOLS

## Pedestals & Colors

**Vertical Display**



*Black and white options for both vertical & angeled displays.

**White**



**Angled Display**

**Black**

## Bracket Options



**Slim Arm Bracket**



**Wearable Bracket**

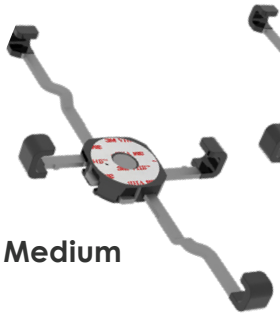

**Medium**

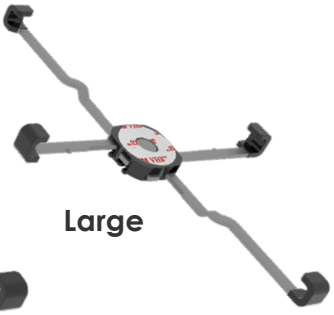

**Large**

## Mounting Kits

**Standard**
**K-1112**

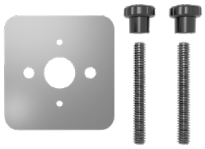

**Security**
**K-1113**

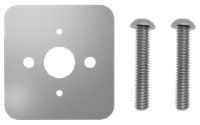

Fixture Depth Compatibility Range:
1.25" (31.75 mm) and thinner

Fixture Hole Compatibility Range:
1.60" (40.6 mm) - 2.5" (63.5 mm)*

*Adapter plate kit available for holes less than 1.60"

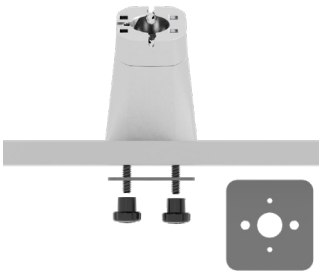

**Single Hole**
**K-1131**



Fixture Hole Compatibility Range:
1.375" (34.92 5mm) - 1.60" (40.64 mm)*

*Single hole may be used on smaller holes down to 0.75" (19.05 mm) by removing the adhesive center.

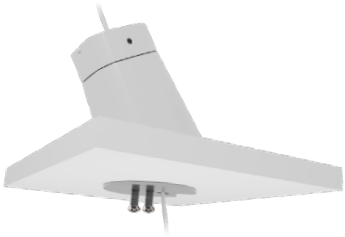

## Front




## Back




## Right

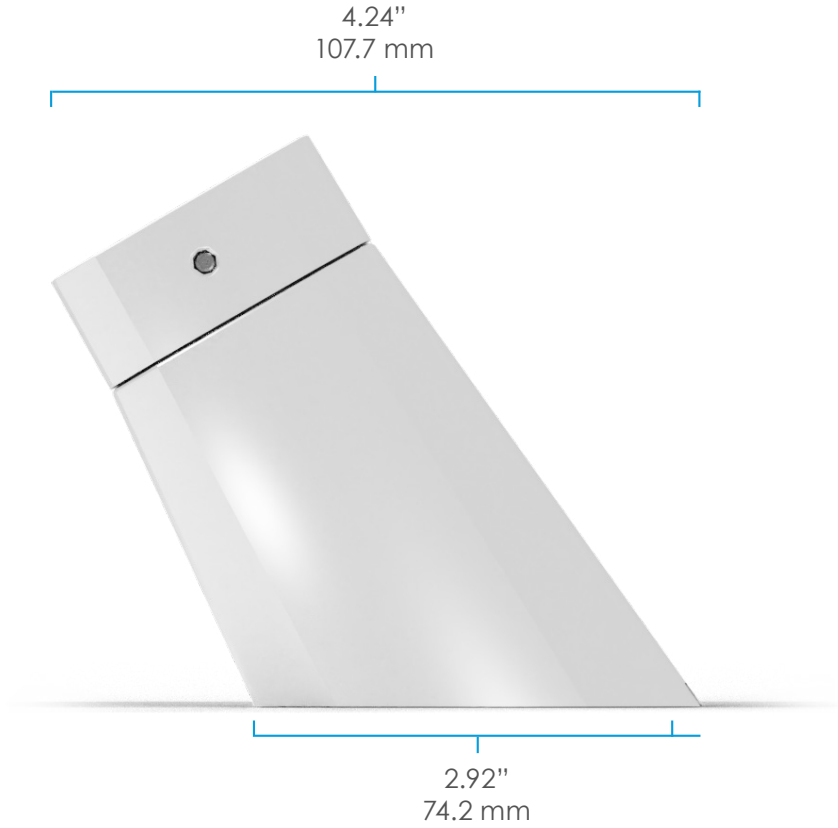


## Bottom




Center of Mounting Holes

## Front

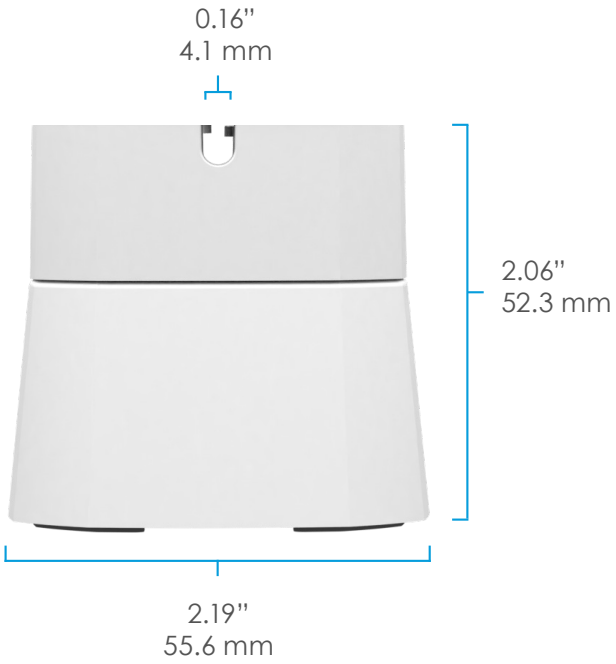


## Back




## Right




## Bottom

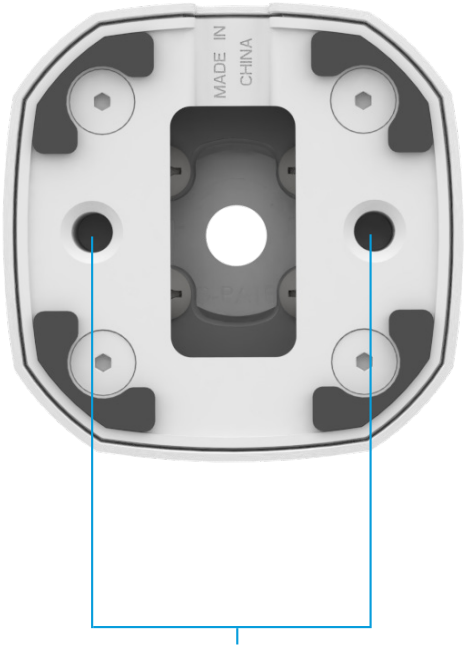


Center of Mounting Holes

## Small

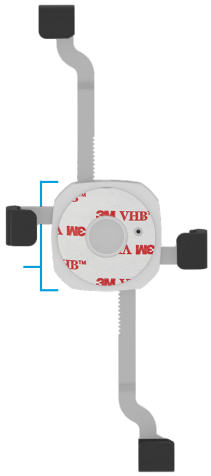

1.85"
47 mm*

Min Device Length:
4.72"
120 mm

Max Device Length:
7.76"
197 mm

Min Device Width:
2.24"
57 mm

Max Device Width:
3.62"
92 mm

*Bracket hub is the same size for all versions.

## Medium

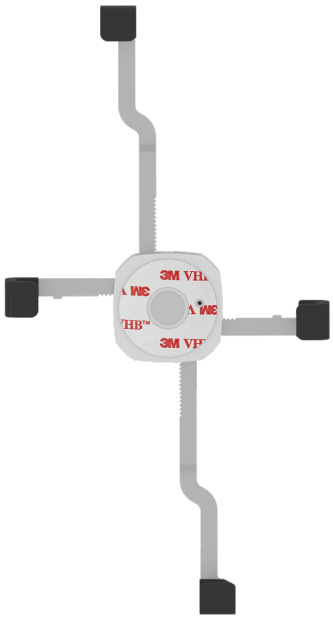

Min Device Length:
6.89"
175 mm

Max Device Length:
10.32"
262 mm

Min Device Width:
3.15"
80 mm

Max Device Width:
5.67"
144 mm

## Large

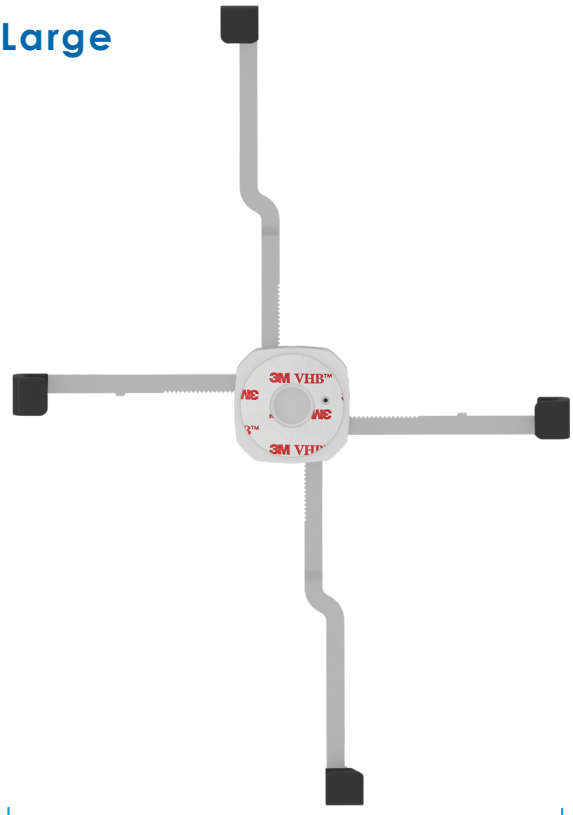

Min Device Length:
9.45"
240 mm

Max Device Length:
12.87"
327 mm

Min Device Width:
4.92"
125 mm

Max Device Width:
9.21"
234 mm

## Slim Arm Bracket



Min Device Length:
4.72"
119.9 mm

Max Device Length:
7.28"
184.9 mm

Min Device Width:
2.24"
58.9 mm

Max Device Width:
3.98"
101 mm

| Part Number | Description |
|---|---|
| **Finished Kits:** Kit contains pedestal, bracket, mounting plate, threaded screws, & thumb nuts | |
| K-TTN-01-AW | TITAN® Kit with Small Bracket All-Thread |
| K-TTNM-01-AW | TITAN® Kit with Medium Bracket All-Thread |
| K-TTNL-01-AW | TITAN® Kit with Large Bracket All-Thread |
| K-TTN-01-HW | TITAN® Kit with Small Bracket All-Thread Hole Mount Adapter |
| K-TTNM-01-HW | TITAN® Kit with Medium Bracket All-Thread Hole Mount Adapter |
| K-TTNL-01-HW | TITAN® Kit with Large Bracket All-Thread Hole Mount Adapter |
| K-TTN-03-AW | TITAN® Tri-Lobe Kit with Small Bracket and All-Thread |
| K-TTNM-03-AW | TITAN® Tri-Lobe Kit with Medium Bracket and All-Thread |
| K-TTNL-03-AW | TITAN® Tri-Lobe Kit with Large Bracket and All-Thread |
| K-TTN-03-BW | TITAN® Tri-Lobe Kit with Small Bracket 1.5in Security Screw Mnt |
| K-TTNM-03-BW | TITAN® Tri-Lobe Kit with Medium Bracket 1.5in Security Screw Mnt |
| K-TTNL-03-BW | TITAN® Tri-Lobe Kit with Large Bracket 1.5in Security Screw Mnt |
| K-TTN-03-HW | TITAN® Tri-Lobe Kit with Small Bracket All-Thread Hole Mount Adapter |
| K-TTNM-03-HW | TITAN® Tri-Lobe Kit with Medium Bracket All-Thread Hole Mount Adapter |
| K-TTNL-03-HW | TITAN® Tri-Lobe Kit with Large Bracket All-Thread Hole Mount Adapter |
| K-TTNV-01-AW | TITAN® Vert Kit with Small Bracket All-Thread Mount |
| K-TTNVM-01-AW | TITAN® Vert Kit with Medium Bracket All-Thread Mount |
| K-TTNVL-01-AW | TITAN® Vert Kit with Large Bracket All-Thread Mount |

| Part Number | Description |
|---|---|
| K-TTNKL-01-AW | TITAN® Keylock Kit with All-Thread Mount |
| K-TTNV-03-AW | TITAN® Vert Tri-Lobe Kit with Small Bracket All-Thread Mount |
| K-TTN-01-H | TITAN® Small Kit Black Single Hole |
| K-TTN-MOTO-W | TITAN® Cell Kit White Motorola |
| K-TTN-W01S | TITAN® Wearable Apple S5 40mm Silver |
| K-TTN-W02 | TITAN® Wearable Apple S5 44mm Black |
| K-TTN-W02S | TITAN® Wearable Apple S5 44mm Silver |
| K-TTNKLV-01-JW | TITAN® Keylock Verticle Small Kit White with Hole |
| K-TTNKLM-01-AW | TITAN® Keylock Medium Kit White with All Thread |
| K-TTNKLL-01-AW | TITAN® Keylock Large Kit White with All Thread |
| K-TTN-W01 | TITAN® Watch Kit - Apple S5 40mm (Kit Includes: watch brackets and acrylic inserts) |
| K-TTN-W02 | TITAN® Watch Kit - Apple S5 44mm (Kit Includes: watch brackets and acrylic inserts) |
| K-TTN-W03 | TITAN® Wearable Apple S7 45mm Black |
| K-TTN-W04 | TITAN® Wearable Apple S7 41mm Black |
| K-TTNKL-01-BW | TITAN® Keylock Small Kit White with 1.5in Security Screw |
| K-TTNKLL-01-BW | TITAN® Keylock Large Kit White with 1.5in Security Screw |

# - Color variation placeholder. Substitute in W for White.
*Products not shown to scale. Subject to change without notice.

| Part Number | Description |
|---|---|
| **Watch Bracket** | |
| VP-1687 | TITAN® Watch Bracket Assembly |
| VP-1687 | TITAN® Wearable Hub Assembly Black |
| VP-1687S | TITAN® Wearable Hub Assembly Sliver |
| VP-1731 | TITAN® Watch Acrylic Insert - Apple S5 40mm |
| VP-1732 | TITAN® Watch Acrylic Insert - Apple S5 44mm |
| VP-1789 | TITAN® Wearable Insert Apple S7 |
| VP-1790 | TITAN® Wearable Insert Apple S7 |
| **Pedestal** | |
| VP-1580#-1 | TITAN® Angled Pedestal |
| VP-1589#-1 | TITAN® Vertical Pedestal |
| VP-1697#-1 | TITAN® Keylock Pedestal |
| VP-1697-1 | TITAN® Keylock Pedestal Black C305 |
| VP-1697W-1 | TITAN® Keylock Pedestal White C305 |
| VP-1697W-2 | TITAN® Keylock Pedestal White C619 |
| VP-1697W-3 | TITAN® Keylock Pedestal White C822 |
| VP-1697W-4 | TITAN® Keylock Pedestal White C133 |
| VP-1697W-5 | TITAN® Keylock Pedestal White C345 |
| VP-1777-1 | TITAN® Keylock Verticle Pedestal Black C305 |
| VP-1777W-1 | TITAN® Keylock Verticle Pedestal White C305 |
| **Security Brackets** | |
| VP-1581 | TITAN® Small Bracket |
| VP-1582 | TITAN® Medium Bracket |
| VP-1583 | TITAN® Large Bracket |
| VP-1699# | TITAN® Slim Arm Bracket |
| VP-1699 | TITAN® Slim Arm Cell Bracket Black |
| VP-1701 | TITAN® Slim Arm Cell Bracket with Center |
| VP-1701W | TITAN® Slim Arm Cell Bracket with Center |

| Part Number | Description |
|---|---|
| **Mounting** | |
| K-1112 | TITAN® All-Thread Mounting Kit |
| K-1113 | TITAN® Security Screw Mounting Kit |
| K-1131 | Hole Mounting Kit Adapter with All-Thread |
| K-1141 | TITAN® Vertical Single Hole Adapter White |
| **Tools and Accessories** | |
| V-T900 | Security Driver - Bracket Lock Tool |
| V-T30 | Security Driver - Quick Disconnect Tool |
| V-46 | V-46 POWER SUPPLY FIXED BLADE |
| VP-1726-1 | TITAN® Keylock Change Key CK208 |
| VP-1727-1 | TITAN® Keylock Key |
| VP-1728-1 | TITAN® Keylock Lock Core C305 |
| VP-1728-2 | TITAN® Keylock Lock Core C619 |
| VP-1728-3 | TITAN® Keylock Lock Core C822 |
| VP-1728-4 | TITAN® Keylock Lock Core C133 |
| VP-1728-5 | TITAN® Keylock Lock Core C345 |

# - Color variation placeholder. Substitute in W for White.
*Products not shown to scale. Subject to change without notice.