USB Type-C Power & Alarm Sensor





- Clean presentation
- Smallest power and security sensor available
- Power and security in one single cord
- Diverse pedestal options available
- Easy installation and removal

The Micro USB Type-C PAS is the most compatible sensor in the industry with its ability to provide power and security all through one port.

The USB Type-C reversible orientation allows for easy remerchandising and removal with power and security in one cable. Its minimalistic display offers a clean presentation for any store environment.

Features

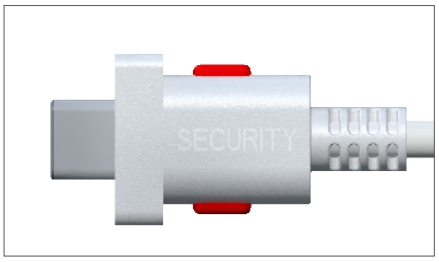

The sensor provides power and security for USB Type-C devices. Coiled cord options are available in black and white.

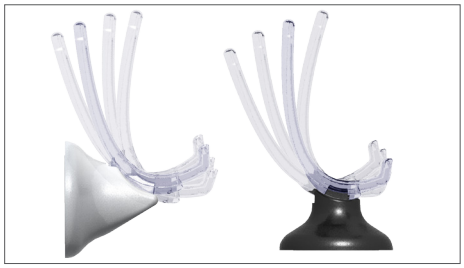

Pedestal options are just as diverse. The vertical and wall mount pedestals with acrylic cradle adjust to fit the specs of your displayed devices.



Easily demonstrate Near Field Communication capable devices without interference from the sensor or pedestal.

Securing

- Phone
- Tablet

Tether Options

- Coil Cord

Alarm Type

- Line Alarm

Security Options

- Alarm and Power



Engage Customers Through :

1. Smallest Sensor in the industry
2. Acrylic Cradle with a sleek presentation
3. Lightweight coil cord

VanguardProtexGlobal.com
1-877-477-4874

Products not shown to scale. Subject to change without notice. This document is confidential and proprietary information.
Copyright © 2017 Vanguard Protex Global. Rev 05.31.17

Variations and Options
USB Type-C Power and Alarm Sensor

Sensor



USB Type-C PAS Coiled Cord

Pedestal with Acrylic Cradle



Display Pedestal
Screw Down
Adhesive
Threaded



Display Pedestal Wall Mount
Screw Down

Security Bracket



Adhesive Sensor Clip

Monitor Module



Standard Power
Phone

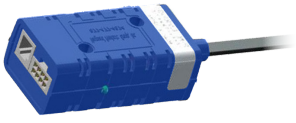

High Power
Phone & Tablet

VanguardProtexGlobal.com
1-877-477-4874

Products not shown to scale. Subject to change without notice. This document is confidential and proprietary information.
Copyright © 2017 Vanguard Protex Global. Rev 05.31.17

Specification Sheet
USB Type-C Power and Alarm Sensor

Coiled Cord
Sensor



** Sensor glows red when device is secured and blinks red when alarm is triggered

Adhesive
Sensor Clip

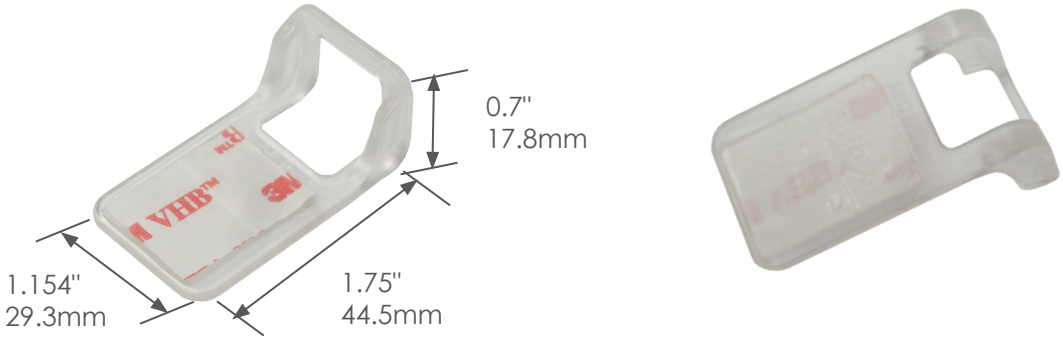

Monitor Module

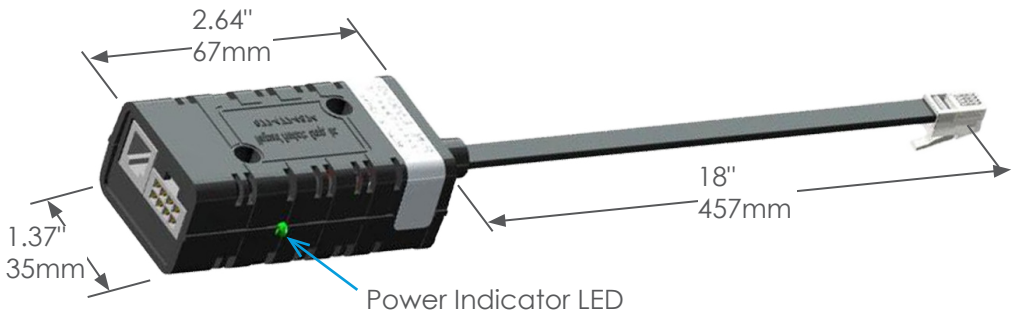

Products not shown to scale. Subject to change without notice. This document is confidential and proprietary information.
Copyright © 2017 Vanguard Protex Global. Rev 05.31.17

Solution Summary
USB Type-C Power and Alarm Sensor - Coiled Cord



Note: Items may be available in black or white, contact your representative for further information.

VanguardProtexGlobal.com
1-877-477-4874
Products not shown to scale. Subject to change without notice. This document is confidential and proprietary information.
Copyright © 2017 Vanguard Protex Global. Rev 05.31.17

Parts List
USB Type-C Power and Alarm Sensor

Sensors	
VP-1441	LV2.1 Type-C PAS CC Sensor Blk
VP-1441W	LV2.1 Type-C PAS CC Sensor Wht
Pedestals	
VP-1203B#	Pedestal - Screw Down - (Black or White)
VP-1203Z#	Pedestal - Threaded - (Black or White)
VP-1204#	Pedestal - Adhesive - (Black or White)
VP-1205B# series	Pedestal - Wall Mount - Screw Down - (Black or White)
	# - Parts available in black or white. Bracket included with sensor.
Monitor Modules	
LV1005	Monitor Module - Standard voltage Phone
LV1040	Monitor Module - High voltage Phone and Tablet
Replacement Parts	
VP-1431C-5	Adhesive Sensor Clip (5-Pack) - Clear
AD-109-50	Pedestal Adhesive (50-Pack)
VP-1074	Nut for threaded snout
Tools and Accessories	
V-44	Adhesive Pedestal Removal Tool
VP-2006-5	Yellow Pedestal Clamp (5-Pack)

Note: Items may be available in different colors. Minimum order quantities may apply. Contact your sales representative for more information. Some items sold separately. Hash tag (#) indicates a variable.

Products not shown to scale. Subject to change without notice. This document is confidential and proprietary information.
Copyright © 2017 Vanguard Protex Global. Rev 05.31.17